Micro- and nano-structure based oligonucleotide sensors

Citation for published version:
Ferrier, D, Shaver, M & Hands, P 2015, 'Micro- and nano-structure based oligonucleotide sensors', *Biosensors & Bioelectronics*, vol. 68, pp. 798-810. https://doi.org/10.1016/j.bios.2015.01.031

Digital Object Identifier (DOI):
10.1016/j.bios.2015.01.031

Published In:
Biosensors & Bioelectronics

Biosensors and Bioelectronics 68 (2015) 798–810 http://dx.doi.org/10.1016/j.bios.2015.01.031

Micro- and Nano-structure Based Oligonucleotide Sensors

David C. Ferrier*, Michael P. Shaver†, Philip, J.W. Hands*‡

Abstract

This paper presents a review of micro- and nano-structure based oligonucleotide detection and quantification techniques. The characteristics of such devices make them very attractive for Point-of-Care or On-Site-Testing biosensing applications. Their small scale means that they can be robust and portable, their compatibility with modern CMOS electronics means that they can easily be incorporated into hand-held devices and their suitability for mass production means that, out of the different approaches to oligonucleotide detection, they are the most suitable for commercialisation. This review discusses the advantages of micro- and nano-structure based sensors and covers the various oligonucleotide detection techniques that have been developed to date. These include: Bulk Acoustic Wave and Surface Acoustic Wave devices, micro- and nano-cantilever sensors, gene Field Effect Transistors, and nanowire and nanopore based sensors. Oligonucleotide immobilisation techniques are also discussed.

1 Introduction

A significant challenge in biosensing is the simple, sensitive and specific detection of oligonucleotide sequences. The detection of these short DNA or RNA molecules has potential applications in fields including medicine (de Planell-Saguer and Rodicio, 2011; Garzon, et al., 2009; Maqbool and Hussain, 2014), food safety (Paniel, et al., 2013), forensic science (Hanson, et al., 2009; Lux, et al., 2014) and counter-terrorism (Wang, et al., 2014). Specific sequences, or profiles of sequences, can be used to diagnose and monitor disease, identify infectious agents and to identify genetic predispositions to disease.

There are many established techniques for oligonucleotide detection, none of which are without their disadvantages. The first techniques developed to address this challenge, such as Southern and Northern Blotting, are insensitive, labour intensive and can only test for a single oligonucleotide at a time (Hong, et al., 2013; Zhang, et al., 2009). The most well-established of the modern techniques are nucleotide microarrays and quantitative Polymerase Chain Reaction (qPCR). Microarrays offer the greatest multiplexing capability but have limited sensitivity and are incapable of measuring absolute nucleic acid concentration. Alternatively, qPCR offers the greatest sensitivity and dynamic range but is severely limited in terms of multiplexing capability. In all established techniques the complexity of oligonucleotide labelling and the requirement for specialised skills and equipment restrict their use to centralised laboratories (Campuzano, et al., 2013; Hong, et al., 2013; Pritchard, et al., 2012; Ren, et al., 2013, Sípová, et al. 2010; Zhang, et al., 2009).

The development and future applications of oligonucleotide sensors require technology that enables Point-of-Care (POC) treatment or On-Site Testing (OST), removing the need for centralised laboratories and specialised personnel. Such advances will mitigate the principle cause of the high cost and long timescales associated with current oligonucleotide testing. In order for this to be possible, any applicable oligonucleotide detection technique must be simple, low-cost, portable and rapid (returning useful results to the end-user in minutes or hours, rather than days). Also, any potential POC or OST oligonucleotide detection technique would need to be able to return results from small volumes of sample material. These requirements are in addition to the demands that any technology developed have sufficient sensitivity, specificity and dynamic range for the intended purpose.

In the broader field of oligonucleotide detection, several good reviews have been recently published (de Planell-Saguer and Rodicio, 2011; Hamidi-Asl, et al., 2013; Hunt, et al., 2009; Liu, et al., 2012; Qavi, et al., 2010) . However, these reviews have focussed on electrochemical and optical techniques, overlooking the many strengths and recent developments in micro- and nano-structure based approaches. This review attempts to redress this im-

*School of Engineering, University of Edinburgh, Edinburgh, UK, EH9 3JL

†School of Chemistry, David Brewster Road, University of Edinburgh, UK, EH9 3FJ

‡Corresponding author, tel: +44 (0)131 650 7473, e-mail: philip.hands@ed.ac.uk

balance. It is aimed at chemists and biologists wishing to gain a greater understanding of micro- and nano-structure based oligonucleotide sensing techniques and engineers wishing to explore potential applications of the technology.

Microelectromechanical System (MEMS) technology originated in the 60s and 70s but it has become especially prominent in the last 15 years. The term MEMS is something of a catch-all term used to refer to micro-scale devices, generally referring to three-dimensional micro-scale devices fabricated using techniques originating in the microelectronics industry, such as: lithography, thin-film deposition, etching and substrate bonding (Bogue, 2007).

MEMS technology exploits the numerous advantages of scale that very small devices offer as well as presenting opportunities not possible with larger scale devices (Judy, 2001; Spearing, 2000; Ziaie, et al. 2004). The drive for ever smaller devices has also led to the development of Nanoelectromechanical System (NEMS) technologies; which are similar to MEMS technologies, only on a smaller scale.

MEMS devices are widely used in the automotive, aerospace, medical and consumer electronics industries for applications including pressure sensors, gyroscopes and microphones (Bogue, 2013; Grayson, et al., 2004; Ziaie, et al., 2004). MEMS devices have also been developed as gas and chemical sensors and in recent years, they have been applied to biosensing for the detection of a wide range of biological molecules, including oligonucleotides. This review discusses the advantages of MEMS and NEMS-based sensors and presents an overview of oligonucleotide immobilisation techniques, before covering the various MEMS and NEMS-based oligonucleotide detection techniques that have been developed to date. These sensors include: Bulk Acoustic Wave (BAW) and Surface Acoustic Wave (SAW) devices, micro- and nano-cantilever sensors, gene Field Effect Transistors (geneFETs), and nanowire and nanopore based sensors.

2 The advantages of micro- and nano-structure based sensors

The application of MEMS and NEMS technologies to biosensing offers several intrinsic advantages. As the techniques used to fabricate micro- and nano-structure based sensors evolved from the microelectronics industry, they are ideally suited to mass production and batch processing. This means the eventual devices will be capable of being produced in large numbers and with a high uniformity, reducing costs via economies of scale (Grayson, et al., 2004; Ziaie, et al., 2004).

The extremely small dimensions that characterise MEMS and NEMS devices are also advantageous. As resolution and sensitivity often scale with size, the micro- and nano-scale dimensions of MEMS and NEMS mean that they are capable of very high sensitivities (Ziaie, et al., 2004; Arlett, et al., 2011). Also, the small size of micro- and nano-scale sensors results in reduced analyte diffusion distances, meaning that they have fast response times, allowing results to be obtained in seconds or minutes. Also, their small scales make them ideally suited for the analysis of small volumes of sample, of the order of micro or nanolitres; the volume scales required for non-invasive POC testing (Grayson, et al., 2004; Arlett, et al., 2011). Additionally, the small scale of MEMS and NEMS-based sensors means that they are robust and portable; advantageous characteristics for any devices intended to be used for POC or OST applications (Bogue, 2013).

MEMS and NEMS devices can be easily interfaced with current Complementary-Metal-Oxide-Semiconductor (CMOS) electronics; permitting co-location of a sensor and the associated input driver electronics and output signal processing on the same single-chip device, or integration with existing electronics technologies. They also have the advantage of being easy to parallelise, meaning that multiple sensors can be included within a single device to give improved reliability through redundancy or the ability to perform tests for multiple different parameters or analytes using a single device (Ziaie, et al., 2004).

Finally, MEMS and NEMS devices are capable of delivering a direct electrical output. This is significant as it removes the need for additional forms of signal transduction and any potential requirement for trained personnel to interpret any data. The output will be machine readable and compatible with a wide range of signal processing and pattern recognition algorithms (Grayson, et al., 2004).

3 Oligonucleotide Immobilisation

Virtually all oligonucleotide biosensing techniques exploit nucleotide hybridisation; the mechanism by which a nucleic acid sequence bonds to its complementary sequence via optimal hydrogen bonding between the bases. This mechanism is highly attractive for biosensing applications as it depends upon strong and specific bonding. Hybridisation is exploited by using either capture or label probes. Capture probes are nucleotide sequences immobilised at the sensor surface so that the corresponding analyte will be bound to the surface upon hybridisation. Label probes are nucleotide sequences functionalised with label molecules (for example fluorophores) such that when the probes hybridise with the corresponding analyte sequence, the analyte will be detectable via the label molecule. Almost all MEMS- or NEMS-based oligonucleotide

detection techniques employ capture probes, which can be immobilised at the sensor surface using a number of different techniques. The immobilisation method used will depend upon the material of the sensor surface and the form of oligonucleotide detection employed. One of the most common techniques exploits the affinity of thiol groups for noble metals such as gold, which can easily be deposited at the sensor surface either as electrodes or as a sensing region on a mechanical device. The capture probes can be readily functionalised with thiol (–SH) groups which covalently bond to the gold via the following mechanism:

$$R - SH + Au \longrightarrow R - S - Au + e^- + H^+ \quad (1)$$

thereby affixing the capture probes to the sensor surface (Figure 1) (Sassolas, et al., 2008).

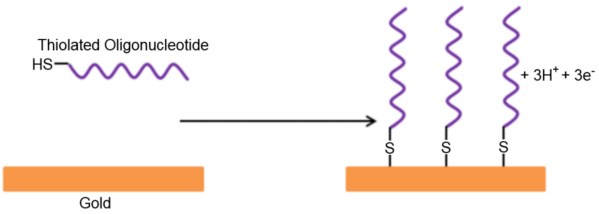

Figure 1: The immobilisation of thiolated oligonucleotides on a gold surface.

Another common technique is to exploit biotin–avidin interactions. Biotin is a small molecule that binds to the protein avidin (or streptavidin) with high affinity. Avidin can be covalently bound to surfaces modified with 3,3-dithiodipropionic acid (Figure 2) and oligonucleotides can be modified with biotin without altering their ability to hybridise. Upon the introduction of the biotinylated oligonucleotides to the avidin-functionalised surface the oligonucleotides will bind to the avidin, anchoring them at the surface. (Caruso, et al., 1997)

Perhaps the simplest form of oligonucleotide immobilisation is adsorption. Oligonucleotides have negatively charged phosphate backbones and thus they will bind electrostatically to a surface coated with a cationic film, eliminating the need to chemically modify the oligonucleotides (Sassolas, et al., 2008). Examples of such films include chitosan (Cai, et al., 2002) and the blend of poly(allylamine)hydrochloride and sodium poly(styrenesulfonate) (Zhou, et al., 2001). The chemical attachment of these oligonucleotides is not the focus of this review; there are many variations of the techniques described above, and many more emerging strategies. The interested reader is directed to leading reviews for further information (Sassolas, et al., 2008; Tombelli, et al., 2000).

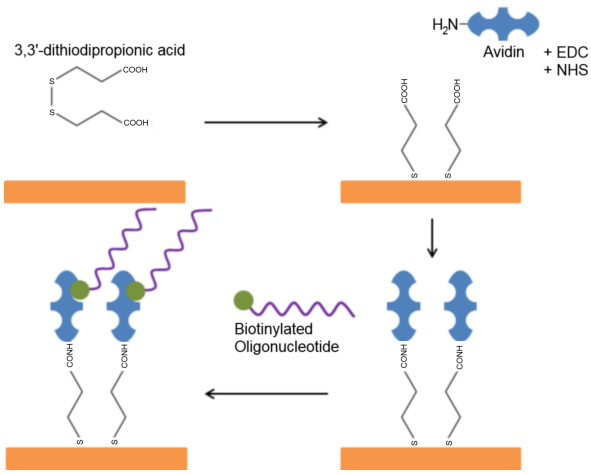

Figure 2: The immobilisation of biotinylated oligonucleotides at a surface modified with avidin. The gold surface is modified with 3,3-dithiodipropionic acid to which avidin is covalently bound using carbodiimide hydrochloride (EDC) and N-hydroxysuccinimide (NHS). Adapted from Caruso, et al. (1997).

4 Micro- and nano-structure based oligonucleotide detection techniques

4.1 Bulk Acoustic Wave devices

Perhaps the oldest form of micromechanical transduction, Bulk Acoustic Wave (BAW) devices are micro-scale sensors that are capable of measuring very small changes in mass. They operate by exploiting the piezoelectric properties of quartz-crystals, i.e. the fact that quartz undergoes a change in volume when a voltage is applied to it (and conversely generates a voltage when compressed). BAW devices consist of a thin layer of quartz with an electrode fabricated on either side (Figure 3). When an alternating current (a.c.) voltage is applied to the crystal it will oscillate at a characteristic resonant frequency that is dependent upon its dimensions and the total oscillating mass. As additional material is deposited on the surface of the BAW device, the mass will change, as will the oscillating frequency. This change in frequency can be easily detected and measured via the output voltage oscillation (Gardner and Bartlett, 1999; O'Sullivan and Guilbault, 1999; Sassolas, et al., 2008). BAW devices come in a variety of different device architectures and are also referred to as Quartz Crystal Microbalances (QCMs), Thickness Shear Mode (TSM), Quartz Crystal Resonator (QCR), Film Bulk Acoustic Resonator (FBAR) or Thin-Film Bulk Acoustic Resonator (TFBAR) devices. (Cooper and Singleton, 2007)

Specificity is imparted to a BAW by coating it with a molecule or polymer that has a suitable (i.e. specific and strong) molecular interaction

with the analyte. This coating will serve as a recognition element, causing only the analyte to adhere to the sensor (Gardner and Bartlett, 1999). In this manner, BAW devices have been used to detect small molecules, proteins, viruses, bacteria and nucleic acids. (Table 1)

For the purposes of oligonucleotide detection, complementary DNA (cDNA) capture probes are bound to the surface of the BAW device. As the analytes matching sequences hybridise to the capture probes the resultant increase in mass produces a measurable change in the oscillating frequency of the BAW device (Cooper and Singleton, 2007; Okahata, et al., 1992; Sassolas, et al, 2008; Teles and Fonseca, 2008).

For biosensing applications it is common to increase the sensitivity of BAW devices by using one of several signal amplification techniques. The most common method is the introduction of complimentary oligonucleotides bound to gold nanoparticles; the additional mass of the gold will result in a far greater mass change at the surface of the BAW device in the presence of the analyte, hence a greater signal (Figure 4) (Patolsky, et al., 2000b). Using this method Liu, et al. (2002; 2004a) have reported limits of detection (LODs) of the order of 100 aM (attomolar) and Mo et al. (2005) have reported a LOD of 74 aM. Alternatives to gold nanoparticles as amplification labels include liposomes (Patolsky, et al., 2000a; Willner, et al., 2002) and magnetic microparticles (Zhang, S., et al., 2002).

Weizmann et al. (2001) have furthered the use of this weighty gold by catalysing the deposition of a layer of gold on the surface of the probes bound to the BAW device. In doing so they have reported LODs ranging from 1 fM (femtomolar) to 300 aM. A similar approach was employed by Feng et al. (2007) in which enzyme labelled oligonucleotide probes are used to catalyse the formation of insoluble products on the surface of the BAW device. This method has achieved LODs ranging from 0.1 nM (nanomolar) to 0.1 pM (picomolar).

Whilst such amplification methods can significantly increase the sensitivity of BAW devices, they limit applicability in POC and OST devices and significantly increase the complexity and cost

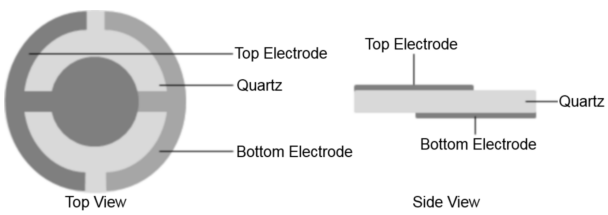

Figure 3: The typical structure for a Bulk Acoustic Wave (BAW) device.

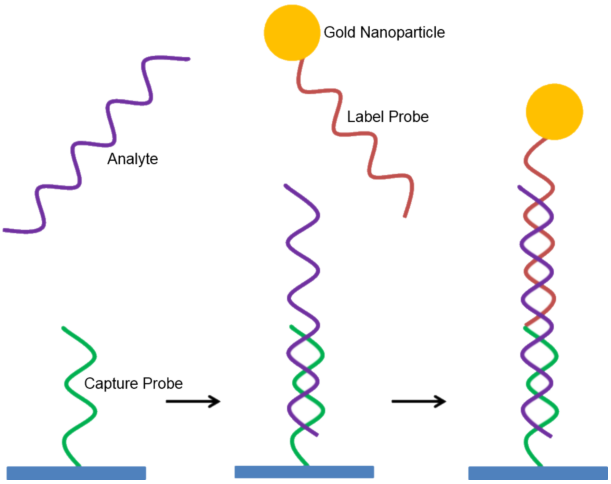

Figure 4: Illustration of the method for signal amplification using gold nanoparticles. Capture probes that correspond to one end of the analyte sequence are immobilised at the sensors surface. Upon introduction of the analyte molecules, they will hybridise with the capture probes. Label probes corresponding to the remainder of the analyte sequence functionalised at one end with a gold nanoparticle are introduced. Upon hybridisation with the analyte molecules, the additional mass of the nanoparticles will result in an amplification of the signal.

of the devices, as well as the skills necessary to employ them. Higher complexity and cost might be acceptable in a high-value, specialist piece of equipment, but not in a mass-produced device intended to be used by non-specialists. Several groups have reported the detection of oligonucleotides with lengths ranging from approximately 10–30 nucleotides (NTs) without resorting to amplification, achieving LODs of the order of 10 nM (DellAtti, et al., 2007; Hong, et al., 2010). Hong et al. (2010) have reported that such BAW devices delivered results within 5 min (Table 2).

BAW devices are advantageous for oligonucleotide sensing as their underlying technology is well established and understood. The devices, unamplified, are relatively low cost and can easily be functionalised to suit specific purposes (Hong, et al., 2010). Their principle disadvantage is that when used in liquid media the viscosity of the liquid will affect the resonant frequency of the BAW device, limiting the sensor accuracy. This problem is particularly pronounced in complex liquid media i.e. whole blood or serum (Guillou-Buffello, et al., 2005). Additionally, there are limits as to how small BAW devices can be as their detection capability scales with surface area (Arntz, et al., 2003); cantilever-based sensors can be manufactured to be 100 times smaller than the equivalent BAW device (vide infra). For these reasons, current research efforts are focussed on alternatives to BAW devices, such as cantilever and Surface Acoustic Wave

Target	Reference(s)
Small Molecules	Cao, et al., 2001; Das et al., 2003; Halámek, et al., 2005; Hirayama, et al., 2002; Karousos, et al., 2002; Karousos and Reddy, 2002; Kobayashi, et al., 2001; Li, G., et al., 2004; Long, et al., 2001; Park, et al., 2004; Pavey, et al., 2001; Percival, et al., 2002
Proteins	Aizawa, et al., 2001; Davis and Leary, 1989; Godber, et al., 2005; Kim, et al., 2009; Kurosawa, et al., 2004; Liu, Y., 2004; Pang, et al., 2007; Thompson, et al., 1986; Wang, et al., 2004; Zhang, J., et al., 2002; Zhang, et al., 2003
Viruses	Cooper, et al., 2001; Dultsev, et al., 2001; Eun, et al., 2002; Lee and Chang, 2005; Uttenthaler, et al., 1998; Uttenthaler, et al., 2001; Wu, et al., 2005; Yao, et al., 2008; Zhou, et al., 2002
Bacteria	Babacan, et al., 2002; He, et al., 2002; Kim, G. H., et al., 2003; Kim and Park, 2003; Kim, N., et al. 2004; Mao, et al., 2006; Pohanka and Skládal, 2005; Si, et al., 2001; Su and Li, 2004; Su and Li, 2005; Vaughan, et al., 2001; Wong, et al., 2002
Nucleic Acid	DellAtti, et al., 2006; Okahata, et al., 1992; Passamano and Pighini, 2006; Su, et al. 2004; Wang and Jiang, 1998; Zhou, et al. 2001

Table 1: Summary of the targets to which BAW sensors have been applied.

Limit of Detection (M)	Response Time (min)	Selectivity	Amplification	Reference(s)
$1-2\times10^{-16}$	120	Not Disclosed (ND)	Y	Liu, T., et al., 2002, 2004
7.4×10^{-17}	4	ND	Y	Mo, et al., 2005
1×10^{-15}	50	Single mismatches	Y	Weizmann, et al., 2001
1×10^{-10}	60	Single mismatches	Y	Feng, et al., 2007
5×10^{-8}	20	ND	N	DellAtti, et al., 2007
1.6×10^{-9}	5	ND	N	Hong, et al., 2010

Table 2: Summary of BAW-based oligonucleotide sensors.

(SAW) based sensors. (Cosnier and Mailley, 2008; Tigli, et al., 2010)

4.2 Surface Acoustic Wave devices

Like BAW devices, SAW devices make use of acoustic waves within piezoelectric substrates. Unlike BAW devices, the energy in SAW devices is confined to the surface of the substrate, rather than being dispersed throughout its entirety. Acoustic waves are generated in SAW devices using Interdigitated Electrodes (IDEs) fabricated on the surface of the piezoelectric substrate. The application of an a.c. voltage to the IDEs will create an oscillating strain within the material that will create waves that travel parallel to the surface. As the acoustic energy within SAW devices is confined to the surface they are highly sensitive to any changes in mass that might occur at the surface, such as the binding of analyte molecules to a recognition layer Gronewold, 2007; Länge, et al., 2008; Voiculescu and Nordin, 2012). Variations of SAW devices include Shear-Horizontal Surface Acoustic Wave (SH-SAW), Surface Transverse Wave (STW) and Love Wave (LW) devices (Rocha-Gaso, et al., 2009).

SAW-based sensors can be implemented in either delay-line or resonator devices. In delay-line devices two sets of IDEs are situated on either side of a sensing region (Figure 5). One set of IDEs functions as a transmitter and the other as a passive receiver. Delay-line sensors function by detecting changes to the time taken for the waves to traverse the sensing region and the amplitude of the received waves, caused by analyte molecules binding to the sensing region (Rocha-Gaso, et al., 2009; Voiculescu and Nordin, 2012).

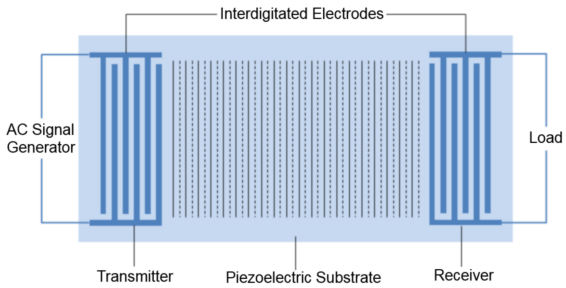

Figure 5: Diagram of the method of operation of a delay-line SAW device. The alternating solid and dashed lines represent the Surface Acoustic Waves which travel across the sensing region between the transmitter and receiver electrodes. Adapted from Pethig and Smith (2013).

In resonator devices a single set of IDEs are situated centrally between reflectors such that standing waves are created within an area encompassing the sensing region (Figure 6). The reflectors typically

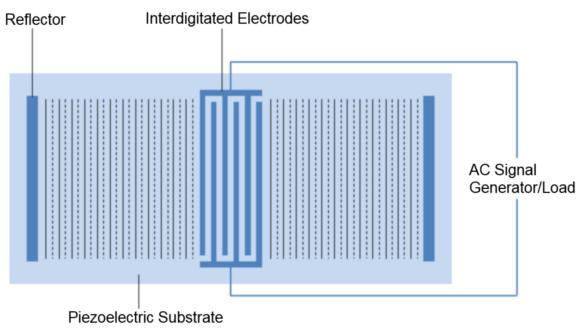

Figure 6: Diagram of the method of operation of a SAW resonator. The alternating solid and dashed lines represent the Surface Acoustic Waves that travel across the sensing region and are reflected back toward the IDEs.

consist of gratings of weakly reflecting components such as thin strips of metal, dielectric or grooves etched into the piezoelectric substrate (Bell and Li, 1976). Resonator devices function by detecting changes in the resonant frequency that result when analyte molecules bind to the sensing region. (Rocha-Gaso, et al., 2009; Voiculescu and Nordin, 2012)

Whilst SAW resonator devices offer several advantages over delay-line devices (such as greater sensitivity, durability and a simpler design), the fact that they suffer from increased viscosity related attenuation and can be more difficult to manufacture reliably means that the majority of research groups employ delay-line SAW devices (Rocha-Gaso, et al., 2009). However, some groups do employ resonator SAW devices (Dickert, et al., 1999; Länge, et al., 2003, 2007).

SAW devices have been used to detect gases and small molecules, proteins, bacteria, viruses and nucleic acids (Table 3). They are commonly fabricated from quartz (SiO_2), Lithium Niobate ($LiNbO_3$) or Lithium Tantalate ($LiTaO_3$), but other materials such as Langasite (Lanthanum Gallium Silicate) may be used (Rocha-Gaso, et al., 2009). The significant attributes sought in SAW materials are the electromechanical coupling factor (the efficiency with which it converts an applied voltage into a mechanical response) and the dielectric constant (ϵ). The latter is important for operation in a liquid medium (as will be the case for most oligonucleotide biosensors), as it is highly desirable that the value for ϵ for the substrate be as close as possible to that of the liquid (in most cases water, $\epsilon \approx 80$) in order to minimise the energy lost to the medium at the IDEs. LiNO3 and LiTaO3 have high values for ϵ (30 and 43 respectively), accounting for their popularity. With a value of approximately 4 the dielectric constant for quartz is significantly lower and its continued use in SAW biosensors most likely owes much to the ease with which it can be used in common microfabrication processes. (Berkenpas, et al., 2003; Länge, et al., 2008; Rupp, et al., 2008)

In the case of oligonucleotide sensing, the recognition element is provided by cDNA capture probes bound to the sensing region as described previously.

Hur et al. (2005) and Sakong et al. (2007) demonstrated the detection of oligonucleotides 15 NTs in length using $LiTaO_3$ delay-line SAW sensors, with LODs of approximately 30 nM and 5 nM respectively. Using quartz SAW sensors, Gronewold et al. (2006) demonstrated the detection of mutations in a BRCA1 gene fragment (one of the principle causes of breast cancer) with a LOD of the order of 10 nM. Xu et al. (2012) demonstrated the successful detection of single NT mutations in the Japanese Encephalitis Virus (JEV). The sensor was able to detect a single NT mismatch between a mutated strain and the wild-type with a LOD of 1 pM (Table 4).

SAW devices are advantageous as they can be highly sensitive (in principle far more sensitive than conventional BAW devices) and they can be easily interfaced with microfluidics. However, disadvantages include the fact that they are sensitive to the density and viscosity of the testing medium as well as temperature and mechanical stress, thus requiring specific controls over the nature of its sample and preparation that may pose challenges for biological samples (Matatagui, et al., 2014; Rocha-Gaso, et al., 2009; Voiculescu and Nordin, 2012).

4.3 Cantilevers

Micro- and nano-cantilevers are micro- and nano-mechanical structures consisting of a beam anchored only at one end. They can be fabricated with dimensions in the micro- or nano-metre scale out of a range of materials. Silicon is the most common example because of its ubiquity in microelectronics and MEMS technology (Lavrik, et al., 2004).

For sensing applications, cantilevers can operate in one of two modes. In the first, known as deflection (or static) mode, the cantilever beam is physically bent as a result of changes in the surface stress that occur when an analyte binds or adheres to the cantilever surface (Fritz, 2008; Hansen and Thundat, 2005; Hwang, et al., 2009; Ziegler, 2004). The magnitude of the deflection is proportional to the analyte concentration and can be transduced by a number of different techniques, including: optical deflection, interferometry, piezoresistive transduction, capacitive transduction and embedding Metal-Oxide-Semiconductor Field-Effect-

Target	Reference(s)
Gases & small molecules	Dickert, et al., 1999; Josse, et al., 2001; Ricco, et al., 1998
Proteins	Harding, et al., 1997; Kalantar-Zadeh, et al., 2003; Länge, et al., 2003; Lnge, et al., 2007; Matatagui, et al., 2014; Rasmusson and Gizelli, 2001; Tigli, et al., 2008; Tigli, et al., 2010
Bacteria	Berkenpas, et al., 2006; Branch and Brozik, 2004; Deobagkar, et al., 2005; Howe and Harding, 2000; Moll, et al.; 2007; Tamarin, et al., 2003
Viruses	Bisoffi, et al., 2008

Table 3: Summary of the targets to which SAW sensors have been applied.

Limit of Detection (M)	Response Time (min)	Selectivity	Material	Reference(s)
3×10^{-8}	10	ND	Lithium	Tantalate Hur, et al., 2005
5×10^{-9}	10	ND	Lithium	Tantalate Sakong, et al., 2007
1×10^{-8}	ND	Single mismatches	Quartz	Gronewold, et al., 2006
1×10^{-12}	5	Single mismatches	Lithium	Tantalate Xu, et al., 2012

Table 4: Summary of SAW-based oligonucleotide sensors.

Transistor (MOSFET) strain gauges into the cantilever structure (Table 5).

In the second mode, known as resonant (or dynamic) mode, the cantilever beam is induced to oscillate; typically by fabricating piezoelectric material into the cantilever structure. Alternatively, thermally (Ilic, et al., 2000; Lange, et al., 2002), optically (Ilic, et al., 2005), electrostatically (O'Shea, et al., 2005) and magnetically (Li, et al., 2006; Vančura, et al., 2005) induced oscillations are also possible. As an analyte binds or adheres to the cantilever beam the change in total mass will result in a change in the resonant frequency of oscillation of the cantilever. This can be measured by optical deflection, interferometry, piezoelectric or piezoresistive response, and magnetic induction (Table 5).

Cantilever-based sensors have detected small molecules and ions, gases and vapours, proteins, bacteria, viruses and nucleic acids (Table 6); as well as to the measurement of environmental conditions such as temperature (Barnes, et al., 1994) and pH (Fritz, et al., 2000; Watari, et al., 2007).

In the case of oligonucleotide sensing, complimentary DNA (cDNA) sequences are used as the recognition element, bound to the cantilever surface. As the target strands hybridise with the cDNA probes, the resultant changes in either the surface stress (deflection mode) or mass (resonant mode) allow for specific detection of the target.

Early efforts in cantilever-based oligonucleotide sensing focused on deflection mode cantilevers, achieving detection limits of the order of 10 nM (Fritz, et al., 2000; McKendry, et al., 2002). However, more recent efforts have focused on resonant mode cantilevers as these are generally capable of higher sensitivities. Ilic et al. (2005) have reported the detection of a single DNA molecule using interferometric transduction (albeit a molecule of approximately 1600 NTs in this case). This impressive single molecule detection was achieved under vacuum (approximately 3×10^{-7} Torr) and hence is not practical for real-world applications. Su et al. (2003) have achieved a detection limit of the order of 50 pM using optical deflection, and Johnson and Mutharasan (2012) have achieved a detection limit of the order of 10 aM in human serum using piezoelectric transduction. In both cases the signal was amplified using gold nanoparticle labelled probes to increase the total mass. Rijal and Mutharasan (2007) demonstrated the successful detection of 10 NT DNA sequences at a detection limit of 2 aM using piezoelectric transduction. They have also successfully demonstrated this technique with background solutions containing a high concentration of non-complementary sequences and 50% human plasma, thus showing great promise for real-world diagnostic applications (Table 7).

A variation of micro-cantilevers is possible wherein the beam is fixed at both ends. Such structures are known as microbridges and they operate in a manner broadly similar to resonant mode cantilevers. It is believed that microbridges may prove more stable than microcantilevers, although potentially at the expense of reduced sensitivity. To date, microbridges have not been extensively investigated for biosensing applications (Adrega, et al., 2006; Lu, et al., 2006).

The principle strengths of micro- or nano-cantilever-based oligonucleotide sensors are easy functionalisation, ready optimisation through manipulation of the sensor geometry, and scalability, with existing fabrication techniques translating into the preparation of large arrays. (Hansen and Thundat, 2005; Ziegler, 2004) The weaknesses of micro- or nano-cantilever based oligonucleotide sensors include their vulnerability to parasitic electronic ef-

Mode	Transduction technique	Reference(s)
Deflection	Optical Deflection	Backmann, et al., 2005; Braun, et al., 2006; Burg, et al., 2007; Fritz, et al., 2000; Hansen, et al., 2001; Huber, et al., 2006; Stachowiak, et al., 2006; Stevenson, et al., 2002; Wu, et al., 2001; Zhang, et al., 2013
Deflection	Interferometry	Kang, K., et al., 2011; Savran, et al., 2004; Yaralioglu, et al., 1998
Deflection	Piezoresistive	Marie, et al., 2002; Rasmussen, et al., 2003
Deflection	Capacitive	Sander and Ibach, 1991
Deflection	MOSFET strain gauges	Shekhawat, et al., 2006
Resonant	Optical Deflection	Burg, et al., 2007; Tian, et al., 2005
Resonant	Interferometry	Ilic, et al., 2000; OShea, et al., 2005; Rugar, et al., 1992
Resonant	Piezoelectric	Campbell and Mutharasan, 2006; Campbell and Mutharasan, 2007; Johnson and Mutharasan, 2012; Kwon, et al., 2007; Lee, et al., 2004; Maraldo, et al., 2007; Rijal and Mutharasan, 2007; Yi, et al., 2002
Resonant	Piezoresistive	Lange, et al., 2002
Resonant	Magnetic Induction	Li, et al., 2006; Vančura, et al., 2005

Table 5: Summary of the transduction methods applied to cantilever-based sensors.

Target	Reference(s)
Small molecules & ions	Cherian, et al., 2002; Dionisio, et al., 2012; Kang, K., et al., 2011, Sander and Ibach, 1991
Gases & vapours	Lang, et al., 1998
Proteins	Arntz, et al., 2003; Backmann, et al., 2005; Braun, et al., 2006; Burg, et al., 2007; Lee, et al., 2005; Maraldo, et al., 2007; Savran, et al., 2004; Shekhawat, et al., 2006; Wu, et al., 2001; Zhang, et al., 2013
Bacteria	Campbell and Mutharasan, 2006; Campbell and Mutharasan, 2007; Mader, et al., 2012; Maraldo, et al., 2007
Viruses	Gupta, et al., 2006

Table 6: Summary of the targets to which cantilever-based sensors have been applied.

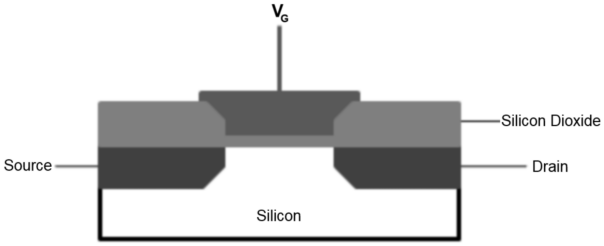

Figure 7: Illustration of the structure of a MOSFET. This example depicts a silicon-based FET, but other materials can be used. Adapted from Bergveld (2003).

fects and their sensitive to changes in the temperature, refractive index and fluid flow of the sensing and/or testing medium (Arlett, et al., 2011).

4.4 GeneFETS

The Metal-Oxide-Semiconductor Field-Effect Transistor (MOSFET) is one of the most common and useful electronic components in the world. The device consists of three electrodes; the source, the drain and the gate electrodes (Figure 7). A MOSFET can be thought of as a switch or a valve in which the electrical current between the source and the drain is dependent upon the voltage applied to the gate electrode.

The development of biosensors based on the MOSFET architecture has its origins in 1970 with the creation of the Ion-Sensitive Field Effect Transistor (ISFET) (Bergveld, 1970), which is essentially a MOSFET with the gate electrode removed and replaced with a combination of an ion selective surface, an electrolyte solution and a reference electrode (Figure 8) (Kataoka-Hamai and Miyahara, 2011; Schoning and Poghossian, 2002). The ionic make-up of the solution will affect the current between the source and the drain, resulting in a solid-state ion-sensitive device. ISFETs have been widely used for the detection of ions (Abramova, 2000; Chudy, et al., 2001; Elbhiri, 2000; Fung, et al., 1986; Jiménez, et al., 1996; Taillades, et al.,1999) and in particular pH measurement (Bousse, et al., 1983; Harame, et al., 1987; Sohn and Kim, 1996).

ISFETs can be adapted to function as biosensors by modifying the gate with different biological recognition elements, creating what are referred to as Biologically-sensitive Field Effect Transistors (BioFETs) (Schoning and Poghossian, 2002). BioFETs can be subcategorised depending upon the recognition element used: Enzyme FETs (EnFETs) make use of enzymes to provide the bioselectivity (Chi, et al., 2000; Dzyadevich, et al., 1999; Luo, et al., 2004a; Luo, et al., 2004b; Poghossian, et al., 2001; Wan, et al., 1999); Immunological FETs (ImmunoFETs) make use of antibodies (Sekiguchi, et al., 2000; Sergeyeva, et al., 1999;

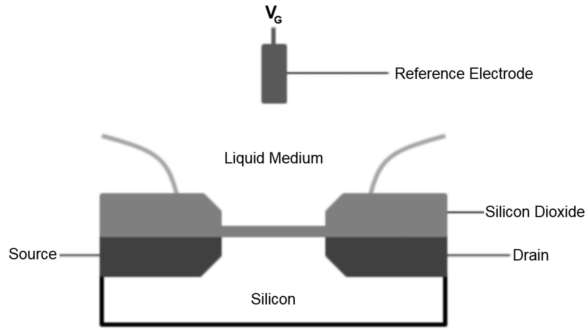

Figure 8: Illustration of the structure of an ISFET. This example depicts a silicon-based FET, but other materials can be used. Adapted from Bergveld (2003).

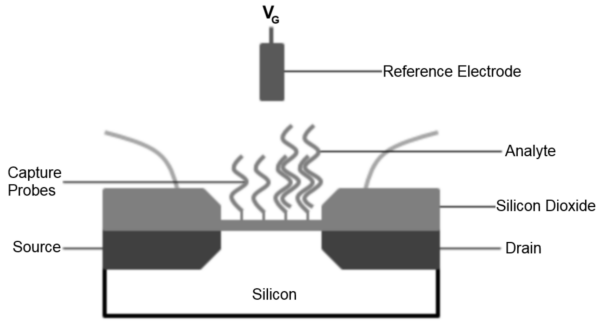

Figure 9: Illustration of the structure of a geneFET. This example depicts a silicon-based FET, but other materials can be used. Adapted from Ingebrandt and Offenhäuser (2006).

Starodub, et al., 2000); and Cell Potential FETs (CPFETs) (Baumann, et al., 1999) are able to measure the properties of whole cells positioned on top of the gate. In the case of oligonucleotide sensing, cDNA capture probes can be bound to the surface of an ISFET to create a geneFET (Figure 9) (Ingebrandt and Offenhäusser, 2006). As the analyte oligonucleotide hybridises with the capture probes at the gate, the innate charge of the nucleotide backbone will affect the current flow between the source and the drain, thus producing a measurable change in the electrical properties of the FET (Estrela, et al., 2005; Gonçalves, et al., 2008; Ingebrandt, et al., 2007; Kamahori, et al., 2008; Kim, D. S., et al., 2003; Kim, D. S., et al., 2004a; Kim, D. S., et al., 2004b; Souteyrand, et al., 1997; Uslu, et al., 2004; Uno, et al., 2007).

Whilst they may seem to have apparent similarities with electrochemical techniques (which are not covered in this review), FET-based techniques are distinct from electrochemical techniques as no electron exchange reactions take place at the sensor surface. FET-based sensors are mainly fabricated out of silicon due to its ubiquity in the microelectronics industry, but a variety of other materials

Limit of Detection (M)	Response Time (min)	Selectivity	Amplification	Mode	Reference(s)
1×10^{-8}	5	Single mismatches	N	Deflection	Fritz, et al., 2000
7.5×10^{-8}	5	Single mismatches	N	Deflection	McKendry, et al., 2002
ND	ND	ND	N	Resonant	Ilic, et al., 2005
5×10^{-11}	18	Single mismatches	Y	Resonant	Su, et al., 2003
1×10^{-17}	25	Single mismatches	Y	Resonant	Johnson and Mutharasan, 2012
2×10^{-18}	20	ND	N	Resonant	Rijal and Mutharasan, 2007

Table 7: Summary of cantilever-based oligonucleotide sensors.

such as Gallium Nitride (Baur, et al., 2006; Steinhoff, et al., 2003), organic polymers (Mabeck and Malliaras, 2005), graphene (Cai, et al., 2014) and diamond (Garrido, et al., 2005; Song, et al., 2006) can be used.

Pouthas et al. (2004) have developed a technique for the detection of the 35delG mutation (a mutation associated with certain types of deafness) using arrays of up to 96 silicon-based geneFETs. This technique has demonstrated a 10 M (micromolar) LOD for oligonucleotides 20 NTs long. Cai et al. (2014) have developed a graphene-based geneFET that has demonstrated a limit of detection of 100 fM. This sensor is also capable of detecting a single NT mismatch and is capable of being regenerated. Song et al. (2006) demonstrated the detection of 21 NT oligonucleotides with a LOD of 10 pM using diamond-based geneFETs. These sensors are capable of detecting a single-base mismatch at a limit of 100 pM and have a response time in the order of tens of minutes (Table 8).

GeneFETs are advantageous as they are well understood, with several decades of research into ISFETs behind them (Ingebrandt and Offenhäuser, 2006; Kim, D. S., et al., 2004a). Disadvantages of geneFETs include the fact that they can suffer from sensor drift and their response will be affected by temperature, pH and the electrolytic composition of the sensing medium (Lucarelli, et al., 2008).

Several groups (Purushothaman, et al., 2006; Wong, et al., 2009; Rothberg, et al., 2011) demonstrated devices for gene sequencing and the detection of Single Nucleotide Polymorphisms (SNPs) based on the use of ISFETS (rather than geneFETs) to detect the change in pH that occurs as a result of hydrogen ions being produced as a byproduct of DNA chain extension. However, as it is unclear whether such techniques will be applicable to the shorter sequences that characterise oligonucleotides, these approaches will not be covered in detail in this review.

4.5 Nanowires

Nanostructures are attractive for biosensing applications as their physical dimensions are comparable to the dimensions of the biomolecules being detected, presenting many interesting possibilities for biosensing (Zhang and Ning, 2012). Nanowires (NWs) are one such class of nanostructure; the binding of charged molecules to the surface of a NW will affect the flow of electrons through the main body (or bulk) of the NW. Hence the binding of an analyte to the surface of a NW will alter the current flow through that NW in a manner that can be easily measured for sensitive analyte detection (Cui, et al., 2001; Gao, et al., 2007). Through the treating of the surface with appropriate recognition layers, NWs have been used in sensors for the detection of ions, small molecules, proteins, viruses and nucleic acids (Table 9). They have also been exploited for the investigation of the physical properties of whole cells (Duan, et al., 2012; Jiang, et al., 2012).

The fundamental physical mechanism by which NW-based sensors operate is identical to that of the FET-based sensors described previously, only that the analyte affects the current flow through the whole of the diameter of the NW, rather than just the surface, as is the case with planar FETs, rendering them far more sensitive. NW-based sensors are often referred to as Nanowire-FETs (NWFETs) (Zhang and Ning, 2012).

In the case of oligonucleotide detection, the recognition element is provided by complimentary capture probes bound to the surface of the NWs (Figure 10). The negative charge of the analyte oligonucleotide backbones influences the current flow through the NWs. Some researchers have utilised neutral nucleic acid analogues such as PNA (Cattani-Scholz, et al., 2008; Gao, et al., 2007; Hahm and Lieber, 2004) and Morpholinos (Zhang, et al., 2010a) as capture probes to limit the influence of the capture probes upon the current flow, thereby increasing the sensitivity of the sensor.

Nanowire sensors are most commonly fabricated from silicon (referred to as Silicon Nanowires

Limit of Detection (M)	Response Time (min)	Selectivity	Material	Reference(s)
1×10^{-5}	15	ND	Silicon	Pouthas, et al., 2004
1×10^{-13}	ND	Single mismatches	Graphene	Cai, et al., 2014
1×10^{-11}	10	Single mismatches	Diamond	Song, et al., 2006
ND	5	ND	Silicon	Kim, D. S., et al., 2003
ND	5	Single mismatches	Silicon	Estrela, et al., 2005
5×10^{-8}	ND	ND	Silicon	Gonçalves, et al., 2008

Table 8: Summary of geneFET-based oligonucleotide sensors.

Target	Reference(s)
Ions	Cui, et al., 2001; Luo, et al., 2009; Wipf, et al., 2013; Zhang, et al., 2007
Small molecules	Wang, et al., 2005
Proteins	Chua, et al., 2009; Kim, et al., 2007; Lee, et al., 2009; Lin, S. P., et al., 2009; Lin, et al., 2010; Mishra, et al., 2008; Stern, et al., 2007; Tang, et al., 2005, Tian, et al., 2011; Zhang, et al., 2011; Zheng, et al., 2005; Zheng, et al., 2010
Viruses	Patolsky, et al., 2004
Nucleic acids	Bunimovich, et al., 2006; Chu, et al., 2013; Li, Z., et al., 2004; Li, et al., 2005; Lin, C. H., et al., 2009; Ryu, et al., 2010

Table 9: Summary of the targets to which nanowire-based sensors have been applied.

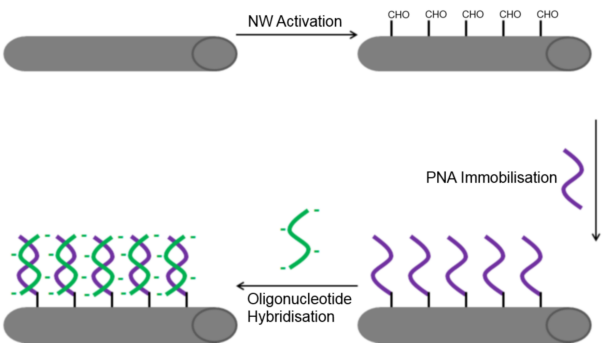

Figure 10: Illustration of the mechanism of NW oligonucleotide biosensors. The NWs are functionalised to enable amine terminated PNA strands to be immobilised on the surface. The analyte oligonucleotide strands will hybridise with the complementary PNA sequences and the innate charge of the nucleotides will influence the current flow through the NWs. Adapted from Gao, et al. (2007).

(SiNWs)), which is unsurprising given its prevalence within microelectronics. However, other materials such as gold (Andreu, et al., 2006; Fang and Kelley, 2009), gallium nitride (Chen, et al., 2011), carbon nanotubes (Sorgenfrei, et al., 2011; Star, et al., 2006), graphene oxide (Stine, et al., 2010) and indium oxide (Tang, et al., 2005) have been used. It is also possible to exploit NWs for oligonucleotide sensing in ways other than the FET-based approach that has been described. Andreu et al. (2006) and Fang and Kelley (2009) have both used coulometry to measure the change in charge caused by analyte nucleotides hybridising to the surface of NWs; however the FET-based approach is by far the most common.

Zhang et al. (2008, 2009, 2010a, 2010b) demonstrated SiNW-based oligonucleotide detection with LODs ranging from 100 fM to 1 fM, using nucleic acid analogue capture probes. They demonstrated the technique for the detection of oligonucleotides of approximately 20NTs in length, using targets such as the miRNAs let7b and let7c (the deregulation of which is associated with various forms of cancer (Jiang, et al., 2009)). The same researchers demonstrated the application of SiNW-based sensors for proteins within an integrated chip designed to detect cardiac biomarkers from a finger-prick of human blood. (Zhang, et al., 2011)

Gao et al. (2011, 2012) used a SiNW-based device to sense oligonucleotides of approximately 20 NTs in length with a LOD as low as 0.1 fM. The same sensors are able to differentiate between the target and oligonucleotides with only a single-base mismatch. This same group has also reported a SiNW-based oligonucleotide sensor with a LOD of

50 aM (Gao, et al., 2013). However, this sensor requires the use of Rolling Circle Amplification (RCA), a method of selectively amplifying the quantity of a particular nucleic acid sequence, in order to enhance the signal.

Chen et al. (2011) demonstrated the detection of oligonucleotides to aM levels using Gallium Nitride nanowire-based sensors. These sensors have been shown to be able to detect single nucleotide mismatches and to have a response time of less than 30 min (Table 10).

Nanowire-based oligonucleotide detection is highly sensitive, highly specific and is label-free. Additionally it is fast, with measurable results within the order of 10 min after the introduction of the analyte oligonucleotide (Hahm and Lieber, 2004), and the nanowires can be fabricated in arrays, allowing for multiplex detection. Also, nanowires are well suited to the analysis of small volume samples.

The principle disadvantage of nanowire-based oligonucleotide sensors is that they are complex and expensive to fabricate, with top-down fabrication of such nanowires requiring more than 60 distinct steps (Cai, et al., 2014). It is possible to fabricate NWs using alternative bottom-up techniques but these have not been widely used for nucleotide biosensors (the interested reader is directed to Noor and Krull (2014) for a comparison between the two fabrication methodologies). Additionally, the presence of salts or other ions in the sensing medium can adversely affect the sensor performance (Stern, et al., 2007; Stine, et al., 2010). This is not ideal for POC applications where the media will likely be complex biological fluids such as serum or plasma.

4.6 Nanopores

Nanopore sensors emerged from the development of the Coulter Counter, a technique for determining numbers of blood cells developed in the 1940s (Wanunu, 2012). Over the years the scale of measurement has progressed from the cellular to the molecular and current nanopore sensors are capable of detecting analytes at a single-molecule level. Nanopore sensors function by measuring the ionic current flow across a membrane separating two chambers containing a solution with a high salt concentration and over which a fixed voltage is applied. Current flow results from a nanoscale aperture allowing the flow of ions across the membrane. When an analyte with a size of the same order of magnitude as the pore diameter is present in one chamber, the molecules transition through the nanopore will temporarily impede the flow of ions and thus result in a drop in the measured current across the membrane. The frequency of these current drops will indicate the concentration of the analyte while

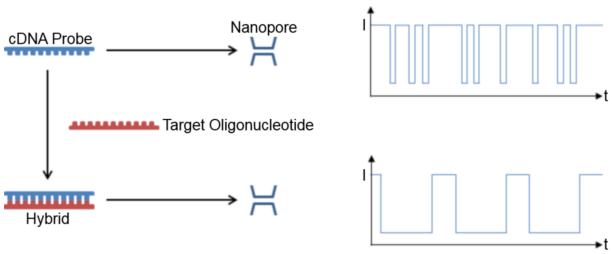

Figure 11: Illustration of the detection method of nanopore oligonucleotide sensors; as the hybridised nucleotides must be unzipped before passing through the nanopore, the duration of the decrease in current lasts much longer. Adapted from Wang, et al. (2014).

their duration will provide information about the physical characteristics of the analyte molecules. Different analytes will interact with the pore in different ways and thus the transition time will vary (Howorka and Siwy, 2009; Liu, et al., 2010; Wang, et al., 2014; Wanunu, 2012).

Nanopore sensors have been built for a number of different analytes including explosives, chemical and biological agents, viruses and nucleic acids (Table 11). In the case of oligonucleotide detection, a high degree of specificity can be imparted through the use of cDNA probes that hybridise specifically with the target oligonucleotide. By selecting the diameter of the nanopore such that the target-cDNA duplex is wider than the aperture whereas single strands are not, the duplexes will be forced to 'unzip before they can fit through the nanopore. This significantly increases the transition time and consequently the duration of the corresponding current drop (Figure 11), allowing the target oligonucleotides to be easily distinguished from any other oligonucleotides present.

There are two strategies for creating suitable nanoscale apertures for nanopore sensors: biological ion channels (such as the α-Haemolysin protein pore) in lipid bilayers extracted from the membranes of cells (Guan, et al., 2005; Jayawardhana, et al., 2009; Wang, et al., 2009; Wang et al., 2014), or solid-state pores created using nanofabrication techniques. Solid-state pores are most commonly fabricated from silicon nitride (Sawafta, et al., 2014; Skinner, et al., 2009; Smeets, et al., 2006; Wanunu, et al., 2010) but other materials such as silicon dioxide (Ding, et al., 2009; Uram, et al., 2006), polydimethylsiloxane (PDMS) (Saleh and Sohn, 2003), gold nanotubes (Sexton, et al., 2007; Siwy, et al., 2005) and graphene (Sadeghi, et al., 2014) have been used.

Biological pores are advantageous as it is easier and cheaper to achieve consistent pore diameters (provided one has the necessary equipment and skills). However, solid-state pores are more durable

Limit of Detection (M)	Response Time (min)	Selectivity	Material	Reference(s)
$10^{-13} - 10^{-15}$	30 – 60	Single mismatches	Silicon	Zhang, et al., 2008, 2009, 2010a, 2010b
$10^{-15} - 10^{-16}$	1	Single mismatches	Silicon	Gao, et al., 2011, 2012
5×10^{-17}	20	Single mismatches	Silicon	Gao, et al., 2013
10^{-14}	10	3 base deletion mutation	Silicon	Hahm and Lieber, 2004
10^{-11}	5	ND	Silicon	Bunimovich, at al., 2006
2.5×10^{-11}	1	Single mismatches	Silicon	Li, Z., et al., 2004, 2005
10^{-18}	30	Single mismatches	Gallium Nitride	Chen, et al., 2011
10^{-15}	3	ND	Silicon	Lin, C. H., et al., 2009
10^{-12}	ND	ND	Silicon	Ryu, et al., 2010
1.4×10^{-11}	60	Single mismatches	Carbon Nanotubes	Star, et al., 2006
2×10^{-9}	10	ND	Graphene Oxide	Stine, et al., 2010
10^{-16}	1	ND	Silicon	Chu, et al., 2013
10^{-14}	60	Single mismatches	Silicon	Gao, et al., 2007

Table 10: Summary of nanowire-based oligonucleotide sensors.

Target	Reference(s)
Explosives	Guan, et al., 2005; Jayawardhana, et al., 2009
Chemical & biological agents	Ding, et al., 2009; Wang, et al., 2009; Wu and Bayley, 2008
Viruses	Uram, et al., 2006
Nucleic acids	Gierhart, et al., 2008; Li, et al., 2003; Sadeghi, et al., 2014; Sawafta, et al., 2014; Singer, et al., 2010; Skinner, et al., 2009; Smeets, et al., 2006; Storm, et al., 2005; Wang, et al., 2011; Wang, et al., 2014; Wanunu, et al., 2010; Zhang et al., 2014

Table 11: Summary of the targets to which nanopore-based sensors have been applied.

and more amenable to mass production; two factors of critical importance for POC or OST technologies.

Wang, L., et al. (2014) have shown that a nanopore sensor created using an α-Haemolysin pore can be used to detect specific DNA strands at sub-nM concentrations in less than one minute. Furthermore, they have shown that target DNA sequences can be distinguished from sequences with only a single-base mismatch as a result of differences in the binding energies of the cDNA probes.

Wang, Y., et al. (2011) demonstrated the detection of circulating miRNA associated with lung cancer at sub-pM levels. They used an α-Haemolysin protein pore to detect miR-155 at the single-molecule level in the serum of lung cancer patients.

Carlsen et al. (2014) demonstrated the detection of the detection of nucleic acids of the order of 100 NTs at nM concentrations using a silicon nitride solid-state nanopore. However, this method involved the modification of the analyte-capture probe duplex with biotin. Wanunu et al. (2010) demonstrated the detection of microRNA at fM concentrations using silicon nitride solid-state nanopores and modifying the analyte-capture probe duplex with the viral protein p19 (Table 12).

Nanopore-based sensors are an attractive prospect for oligonucleotide detection as they are ideally suited to small sample volumes (being capable of single molecule detection) as well as being highly specific. Additionally they are fast, label-free, reusable and they do not require any kind of surface immobilisation (Liu, et al., 2010; Wang, et al., 2011; Wang, et al., 2014; Wanunu, et al., 2010). However, they have some notable drawbacks: they have a low-throughput and, whilst they are capable of multiplex detection, their multiplex capacity is limited (Zhang, et al., 2014).

5 Prospects/Conclusion

This review has presented a summary of micro- and nano-structure based oligonucleotide detection techniques. The characteristics of these technologies make them very attractive for potential POC and OST applications. Their small scale means that they can be robust and portable, their compatibility with modern CMOS electronics means that they can easily be incorporated into hand-held devices and their suitability for mass production means that, out of the different approaches to oligonucleotide detection, they are the most suitable for commercialisation.

Their sensitivity, ranging from nanomolar to attomolar levels, is comparable if not superior to most electrochemical or optical approaches. Ad-

Limit of Detection (M)	Response Time (min)	Selectivity	Material	Amplification	Reference(s)
10^{-10}	1	Single mismatches	Protein	N	Wang, et al., 2014
10^{-12}	ND	Single mismatches	Protein	N	Wang, et al., 2011
10^{-9}	ND	ND	Silicon Nitride	Y	Carlsen, et al., 2014
10^{-15}	4	ND	Silicon Nitride	Y	Wanunu, et al., 2010

Table 12: Summary of nanopore-based oligonucleotide sensors.

ditionally, all MEMS and NEMS-based approaches demonstrate sufficient selectivity to detect single-base mismatches. The small scale of these devices means that they are capable of fast response times (of the order of tens of minutes or less) when compared to those of more established oligonucleotide detection techniques (of the order of hours to days). Additionally, with a few exceptions, MEMS- and NEMS-based oligonucleotide detection techniques are label free.

There are several areas where the development of micro- and nano-structure based oligonucleotide sensors is likely to be focussed in the future. It is highly desirable to minimise the amount of sample preparation required, this may involve developing sensors that are capable of functioning in complex media, such as whole blood or serum, or developing sample preparation on-a-chip techniques in the manner of Zhang et al. (2011).

Multiplex measurements will be a critical capability in any POC or OST application in order to allow high-throughput, reduce ambiguity and improve reliability. Whilst virtually all MEMS and NEMS-based oligonucleotide sensor technologies are capable of being fabricated in arrays for multiplex detection, few have been demonstrated on the scale that would be desirable for POC or OST applications (on the order of 100 sensors per device).

In recent years, authors discussed in this review have had patents granted covering cantilever (Mutharasan and Maraldo, 2011; Mutharasan, et al., 2014), nanowire (Kang, T. G., et al., 2011; Zhang, et al., 2012) and nanopore (Drndic, et al., 2013; Meller, et al., 2012; Meller and Wanunu, 2010; Hall, et al., 2012; Huber, et al., 2013; Gu, et al., 2013; Guan, et al., 2010; Zhao, et al., 2010) based nucleotide sensors, whereas other patents cover BAW (Loebl and Wendt, 2005), SAW (Fujimoto, et al., 2010) and geneFET (O'Uchi, 2006) based nucleotide sensors. This activity further indicates that micro- and nano-structure devices offer promising technologies for the development of oligonucleotide biosensors for POC and OST applications.

Acknowledgments

The authors would like to thank the Engineering and Physical Sciences Research Council (EPSRC) and the School of Engineering at the University of Edinburgh for a PhD studentship for David Ferrier. We also thank Rebecca Cheung of the University Edinburgh for her comments and suggestions.

References

Abramova, N., 2000. Talanta, 52, 533-538.

Adrega, T., Prazeres, D., Chu, V., Conde, J., 2006. J. Non-Cryst. Solids, 352(9-20), 1999-2003.

Aizawa, H., Kurosawa, S., Tanaka, M., Wakida, S., Talib, Z., Park, J.-W., Yoshimoto, M., Muratsugu, M., Hilborn, J., Miyake, J., Tanaka, H., 2001. Mater. Sci. Eng., C 17, 127-132.

Andreu, A., Merkert, J. W., Lecaros, L. A., Broglin, B. L., Brazell, T. J., El-Kouedi, M., 2006. Sens. Actuators B, 114, 1116-1120.

Arlett, J. L., Myers, E. B., Roukes, L. M., 2011. Nat. Nanotechnol., 6(4), 203-215.

Arntz, Y., Seelig, J. D., Lang, H. P., Zhang, J., Hunziker, P., Ramseyer, J. P., Meyer, E.; Hegner, M., Gerber, C., 2003. Nanotechnology, 14, 86-90.

Babacan, S., Pivarnik, P., Letcher, S. & Rand, A., 2002. J. Food Sci., 67(1), 314-320.

Backmann, N., Zahnd, C., Huber, F., Bietsch, A., Plückthun, A., Lang, H.-P.; Güntherodt, H.-J., Hegner, M. Gerber, C., 2005. PNAS, 102(41), 14587-14592.

Barnes, J. R., Stephenson, R. J., Woodburn, C. N., O'Shea, S. J., Welland, M. E., Rayment, T., Gimzewski, J. K., Gerber, C., 1994. Rev. Sci. Instrum., 65(12), 3793-3798.

Baumann, W.H., Lehmann, M., Schwinde, A., Ehret, R., Brischwein, M., Wolf, B., 1999. Sens. Actuators, B, 55, 77-89.

Baur, B., Howgate, J., von Ribbeck, H.-G., Gawlina, Y., Bandalo, V., Steinhoff, G., Stutzmann, M., Eickhoff, M., 2006. Appl. Phys. Lett., 89(18), 183901.

Bell, D., Li, R., 1976. Proc. IEEE, 64(5), 711-721.

Bergveld, P., 1970. IEEE Trans. Biomed. Eng., 17, 70-71.

Bergveld, P., 2003. Sens. Actuators B, 88(1), 1-20.

Berkenpas, E., Bitla, S., Millard, P., 2003. IEEE Ultrason. Symp., 1404-1407.

Berkenpas, E., Millard, P., Cunha, M., 2006. Biosens. Bioelectron., 21, 2255-2262.

Bisoffi, M., Hjelle, B., Brown, D. C., Branch, D. W., Edwards, T. L., Brozik, S. M., Bondu-Hawkins, V. S., Larson, R. S., 2008. Biosens. Bioelectron., 23(9), 1397-1403.

Bogue, R., 2007. Sens. Rev., 27(1), 7-13.

Bogue, R., 2013. Sens. Rev., 33(4), 300-304.

Bousse, L., De Rooij, N. F., Bergveld, P., 1983. IEEE Trans. Electron Devices, 30(10), 1263-1270.

Branch, D., Brozik, S., 2004. Biosens. Bioelectron., 19, 849-859.

Braun, T., Backmann, N., Vögtli, M., Bietsch, A., Engel, A., Lang, H.-P., Gerber, C., Hegner, M., 2006. Biophys. J., 90(8), 2970-2977.

Bunimovich, Y. L., Shin, Y. S., Yeo, W. S. S., Amori, M., Kwong, G., Heath, J. R., 2006. J. Am. Chem. Soc., 128(50), 16323-16331.

Burg, T. P., Godin, M., Knudsen, S. M., Shen, W., Carlson, G., Foster, J. S., Babcock, K., Manalis, S. R., 2007. Nature, 446(7139), 1066-1069.

Cai, B, Wang, S., Huang, L., Ning, Y., Zhang, Z., Zhang, G. J., 2014. ACS Nano, 8(3), 2632-2638.

Cai, H., Wang, Y., He, P., Fang, Y., 2002. Anal. Chim. Acta, 469, 165-172.

Campbell, G. A. & Mutharasan, R., 2006. Biosens. Bioelectron., 22(1), 78-85.

Campbell, G. & Mutharasan, R., 2007. Anal. Chem., 79(3), 1145-1152.

Campuzano, S., Pedrero, M. & Pingarrón, J. M., 2013. Anal. Bioanal. Chem., 406(1), 27-33.

Cao, L., Li, S. & Zhou, X., 2001. The Analyst, 126(2), 184-188.

Carlsen, A. T., Zahid, O. K., Ruzicka, J. A., Taylor, E. W., Hall, A. R., 2014. Nano. Lett., 14(10), 5488-5492.

Caruso, E., Rodda, E., Furlong, D. N., Niikura, K., Okahata, Y., 1997. Anal. Chem., 69(11), 2043-2049.

Cattani-Scholz, A., Pedone, D., Dubey, M., Neppl, S., Nickel, B., Feulner, P., Schwartz, J., Abstreiter, G., Tornow, M., 2008. ACS Nano, 2(8), 1653-1660.

Chen, C. P., Ganguly, A., Lu, C. Y., Chen, T. Y., Kuo, C. C., Chen, R. S., Tu, W. H., Fischer, W., Chen, K. H., Chen, L. C., 2011. Anal. Chem., 83, 1938-1943. Cherian, S., Mehta, A., Thundat, T., 2002. Langmuir, 18(18), 6935-6939.

Chi, L. L., Yin, L. T., Chou, J. C., Chung, W. Y., Sun, T. P., Hsuing, K. P., Hsuing, S. K., 2000. Sens. Actuators B, 71, 68-72.

Chua, J. H., Chee, R. E., Agarwal, A., Wong, S., Zhang, G. J., 2009. Anal. Chem., 81(15), 6266-6271.

Chu, C. J., Yeh, C. S., Liao, C. K., Tsai, L. C., Huang, C. M., Lin, H. Y., Shyue, J. J., Chen, Y. T., Chen, C. D., 2013. Nano Lett., 13(6), 2564-2569.

Chudy, M., Wrblewski, W., Dybko, A., Brzzka, Z., 2001. Sens. Actuators B, 78, 320-325.

Cooper, M. A., Dultsev, F. N., Minson, T., Ostanin, V. P., Abell, C., Klenerman, D., 2001. Nat. Biotechnol., 19(9), 833-837.

Cooper, M., Singleton, V., 2007. J. Mol. Recognit., 20, 154-184.

Cosnier, S., Mailley, P., 2008. The Analyst, 133(8), 984-991.

Cui, Y., Wei, Q., Park, H., Lieber, C. M., 2001. Science, 293(5533), 1289-1292.

Das, K., Penelle, J., Rotello, V., 2003. Langmuir, 19(9), 3921-3925.

Davis, K., Leary, T., 1989. Anal. Chem., 61, 1227-1230.

de Planell-Saguer, M., Rodicio, M. C., 2011. Anal. Chim. Acta, 699(2), 134-152.

Dell'Atti, D., Tombelli, S., Minunni, M., Mascini, M., 2006. Biosens. Bioelectron., 21, 1876-1879.

Dell'Atti, D., Zavaglia, M., Tombelli, S., Bertacca, G., Cavazzana, A. O., Bevilacqua, G., Minunni, M., Mascini, M., 2007. Clin. Chim. Acta, 383, 140-146.

Deobagkar, D. D., Limaye, V., Sinha, S., Yadava, R. D. S., 2005. Sens. Actuators B, 104, 85-89.

Dickert, F., Tortschanoff, M., Bulst, W., Fischerauer, G., 1999. Anal. Chem., 71, 4559-4563.

Ding, S., Gao, C., Gu, L. Q., 2009. Anal. Chem., 81, 6649-6655.

Dionisio, M., Oliviero, G., Menozzi, D., Federici, S., Yebeutchou, R., Schmidtchen, F., Dalcanale, E., Bergese, P., 2012. J. Am. Chem. Soc., 134(4), 2392-2398.

Drndic, M., Healy, K., Wanunu, M., Merchant, C. A., Puster, M., Venta, K. E.; 2013. Patent No. US 20130309776 A1.

Duan, X., Gao, R., Xie, P., Cohen-Karni, T., Qing, Q., Choe, H., Tian, B., Jiang, X., Lieber, C., 2012. Nat. Nanotechnol., 7(3), 174-179.

Dultsev, F., Speight, R., Fiorini, M., Blackburn, J., Abell, C., Ostanin, V., Klenerman, D., 2001. Anal. Chem., 73(16), 3935-3939.

Dzyadevich, S. V., Korpan, Y. I., Arkhipova, V. N., Alesina, M., Martelet, C., El'Skaya, A. V., Soldatkin, A. P., 1999. Biosens. Bioelectron., 14(3), 283-287.

Elbhiri, Z., 2000. Talanta, 52, 495-507.

Estrela, P., Stewart, A. G., Yan, F., Migliorato, P., 2005. Electrochim. Acta, 50, 4995-5000.

Eun, A. J., Huang, L., Chew, F. T., Li, S. F., Wong, S. M., 2002. J. Virol. Methods, 99(1-2), 71-79.

Fang, Z., Kelley, S. O., 2009. Anal. Chem., 81(2), 612-617.

Feng, K., Li, J., Jiang, J.-H., Shen, G.-L., Yu, R.-Q., 2007. Biosens. Bioelectron., 22, 1651-1657.

Fritz, J., 2008. The Analyst, 133(7), 855-863.

Fritz, J., Baller, M. K., Lang, H. P., Rothuizen, H., Vettiger, P., Meyer, E., Güntherodt, H., Gerber, C., Gimzewski, J. K., 2000. Science, 288(5464), 316-318.

Fujimoto, K., Kadota, M., Yoshii, Y.; 2010. Patent No. US 7816837 B2.

Fung, C. D., Cheung, P. W., Ko, W. H., 1986. IEEE Trans. Electron Devices, 33(1), 8-18.

Gao, A., Lu, N., Dai, P., Li, T., Pei, H., Gao, X., Gong, Y., Wang, Y., Fan, C., 2011. Nano Lett., 11(9), 3974-3978.

Gao, A., Lu, N., Wang, Y., Dai, P., Li, T., Gao, X., Wang, Y., Fan, C., 2012. Nano Lett., 12(10), 5262-5268.

Gao, A., Zou, N., Dai, P., Lu, N., Li, T., Wang, Y., Zhao, J., Mao, H., 2013. Nano Lett., 13(9), 4123-4130.

Gao, Z., Agarwal, A., Trigg, A. D., Singh, N., Fang, C., Tung, C. H., Y., F., Buddharaju, K. D., Kong, J., 2007. Anal. Chem., 79(9), 3291-3297.

Gardner, J. W., Bartlett, P. N., 1999. Electronic Noses: Principles and Applications, Oxford University Press, New York, 88-98.

Garrido, J., Härtl, A., Kuch, S., Stutzmann, M., Williams, O., Jackmann, R., 2005. Appl. Phys. Lett., 86(7), 073504.

Garzon, R., Calin, G. A., Croce, C. M., 2009. Annu. Rev. Med., 60, 167-179.

Gierhart, B., Howitt, D., Chen, S., Zhu, Z., Kotecki, D., Smith, R., Collins, S., 2008. Sens. Actuators B, 132, 593-600.

Godber, B., Thompson, K. S., Rehak, M., Uludag, Y., Kelling, S., Sleptsov, A., Frogley, M., Wiehler, K., Whalen, C., Cooper, M. A., 2005. Clin. Chem., 51(10), 1962-1972.

Gonçalves, D., Prazeres, D. M. F., Chu, V., Conde, J. P., 2008. Biosens. Bioelectron., 24, 545551.

Grayson, A., Shawgo, R., Johnson, A., Flynn, N., Li, Y., Cima, M., Langer, R., 2004. Proc. IEEE, 92(1), 6-21.

Gronewold, T., Baumgartner, A., Quandt, E., Famulok, M., 2006. Anal. Chem., 78, 4865-4871.

Gronewold, T. M., 2007. Anal. Chim. Acta, 603(2), 119-128.

Guan, X., Gu, L., Cheley, S., Braha, O., Bayley, H., 2005. ChemBioChem, 6, 1875-1881.

Guan, X., Jayawardhana, D. A., Armstrong, D. W., De Zoysa, R. S., Wang, D., Zhao, Q.; 2010. Patent No. US 20100148126 A1.

Guillou-Buffello, D., Hélary, G., Gindre, M., Pavon-Djavid, G., Laugier, P., Migonney, V., 2005. Biomaterials, 26, 4197-4205.

Gu, L.-Q., Wang, Y., Tian, K.; 2013. Patent No. US 20130220809 A1.

Gupta, A. K., Nair, P. R., Akin, D., Ladisch, M. R., Broyles, S., Alam, M. A., Bashir, R., 2006. PNAS, 103(36), 13362-13367.

Hahm, J., Lieber, C., 2004. Nano Lett., 4(1), 51-54.

Halámek, J., Makower, A., Knösche, K., Skládal, P., Scheller, F. W., 2005. Talanta, 65(2), 337-342.

Hall, A. R., Yang, J., Ferranti, D. C., Sanford, C.A.; 2012. Patent No. WO 2012170499 A2.

Hamidi-Asl, E., Palchetti, I., Hasheminejad, E., Mascini, M., 2013. Talanta, 115, 74-83.

Hansen, K. M., Ji, F. H., Wu, G., Datar, R., Cote, R., Majumdar, A., Thundat, T., 2001. Anal. Chem., 73(7), 1567-1571.

Hansen, K. M., Thundat, T., 2005. Methods, 37(1), 57-64.

Hanson, E. K., Lubenow, H., Ballantyne, J., 2009. Anal. Biochem., 387(2), 303-314.

Harame, D. L., Bousse, L. J., Schott, J. D., Meindl, J. D., 1987. IEEE Trans. Biomed. Eng., 34(8), 1700-1707.

Harding, G. L., Du, J., Dencher, P. R., Barnett, D., Howe, E., 1997. Sens. Actuators A, 61, 279-286.

He, F., Zhang, L., Zhao, J., Hu, B., Lei, J., 2002. Sens. Actuators B, 85, 284-290.

Hirayama, K., Sakai, Y., Kameoka, K., Noda, K., Naganawa, R., 2002. Sens. Actuators B, 86, 20-25.

Hong, C. Y., Chen, X., Liu, T., Li, J., Yang, H. H., Chen, J. H., Chen, G. N., 2013. Biosens. Bioelectron., 50, 132-136.

Hong, S. R., Jeong, H. D., Hong, S., 2010. Talanta, 82, 899-903.

Howe, E., Harding, G., 2000. Biosens. Bioelectron., 15, 641-649.

Howorka, S., Siwy, Z., 2009. Chem. Soc. Rev., 38, 2360-2384.

Huber, F., Hegner, M., Gerber, C., Güntherodt, H. J., Lang, H., 2006. Biosens. Bioelectron., 21(8), 1599-1605.

Huber, M., Clancy, B. E., Hall, A. R.; 2013. Patent No. US 20130203050 A1.

Hunt, E. A., Goulding, A. M., Deo, S. K., 2009. Anal. Biochem., 387(1), 1-12.

Hur, Y., Han, J., Seon, J., Pak, Y., Roh, Y., 2005. Sens. Actuators A, 120, 462-467.

Hwang, K. S., Lee, S. M., Kim, S. K., Lee, J. H., Kim, T. S., 2009. Annu. Rev. Anal. Chem., 2, 77-98.

Ilic, B., Czaplewski, D., Craighead, H., Neuzil, P., Campagnolo, C., Batt, C., 2000. Appl. Phys. Lett., 77(3), 450-452.

Ilic, B., Yang, Y., Aubin, K., Reichenbach, R., Krylov, S., Craighead, H. G., 2005. Nano Lett., 5(5), 925-929.

Ingebrandt, S., Han, Y., Nakamura, F., Poghossian, A., Schöning, M. J., Offenhäusser, A., 2007. Biosens. Bioelectron., 22, 28342840.

Ingebrandt, S., Offenhäusser, A., 2006. Phys. Status Solidi A, 203(14), 3399-3411.

Jayawardhana, D., Crank, J., Zhao, Q., Armstrong, D., Guan, X., 2009. Anal. Chem., 81, 460-464.

Jiang, Q., Wang, Y., Hao, Y., Juan, L., Teng, M., Zhang, X., Li, M., Wang, G., Liu, Y., 2009. Nucleic Acids Res., 37, 98-104.

Jiang, Z., Qing, Q., Xie, P., Gao, R., Lieber, C., 2012. Nano Lett., 12(3), 1711-1716.

Jiménez, C., Marqués, I., Bartrolí, J., 1996. Anal. Chem., 68, 3801-3807.

Johnson, B. N., Mutharasan, R., 2012. Anal. Chem., 84(23), 10426-10436.

Josse, F., Bender, F., Cernosek, R., 2001. Anal. Chem., 73, 5937-5944.

Judy, J. W., 2001. Smart Mater. Struct., 10, 1115-1134.

Kalantar-Zadeh, K., Wlodarski, W., Chen, Y., Fry, B.; Galatsis, K., 2003. Sens. Actuators B, 91, 143-147.

Kamahori, M., Ishige, Y., Shimoda, M., 2008. Biosens. Bioelectron., 23, 1046-1054.

Kang, K., Sachan, A., Nilsen-Hamilton, M, Shrotriya, P., 2011. Langmuir, 27(23), 14696-14702.

Kang, T. G., Agarwal, A., Ji, H., Zhang, G., Chen, Y.; 2011. Patent No. US 20110104817 A1.

Karousos, N. and Reddy, S., 2002. The Analyst, 127(3), 368-372.

Karousos, N., Aouabdi, S., Way, A., Reddy, S., 2002. Anal. Chim. Acta, 469, 189-196.

Kataoka-Hamai, C., Miyahara, Y., 2011. IEEE Sens. J., 11(12), 3153-3160.

Kim, A., Ah, C., Yu, H., Yang, J. H., Baek, I. B., Ahn, C. G., Park, C., Jun, M., Lee, S., 2007. Appl. Phys. Lett., 91(10), p. 103901.

Kim, D. S., Jeong, Y. T., Park, H. J., Shin, J. K., Choi, P., Lee, H. H., Lim, G., 2003. Jpn. J. Appl. Phys., 42(6B), 4111-4115.

Kim, D. S., Jeong, Y. T., Park, H. J., Shin, J. K., Choi, P., Lee, H. H., Lim, G., 2004a. Biosens. Bioelectron., 20(1), 69-74.

Kim, D. S., Park, H. J, Jung, H. M., Shin, J. K., Choi, P., Lee, J. H., Lim, G., 2004b. Jpn. J. Appl. Phys., 43(6B), 3855-3859.

Kim, G. H., Rand, A. G., Letcher, S. V., 2003. Biosens. Bioelectron., 18(1), 91-99.

Kim, N., Kim, D.-K., Cho, Y.-J., 2009. Sens. Actuators B, 143, 444-448.

Kim, N., Park, I., Kim, D., 2004. Sens. Actuators B, 100, 432-438.

Kim, N., Park, I. S., 2003. Biosens. Bioelectron., 18(9), 1101-1107.

Kobayashi, T., Murawaki, Y., Reddy, P., Abe, M., Fujii, N., 2001. Anal. Chim. Acta, 435, 141-149.

Kurosawa, S., Nakamura, M., Park, J.-W., Aizawa, H., Yamada, K., Hirata, M., 2004. Biosens. Bioelectron., 20(6), 1134-1139.

Kwon, H. S., Han, K. C., Hwang, K., Lee, J., Kim, T., Yoon, D., Yang, E., 2007. Anal. Chim. Acta, 585(2), 344-349.

Lang, H. P., Berger, R., Battiston, F., Ramseyer, J. P., Meyer, E., Andreoli, C., Brugger, J., Vettiger, P., Despont, M., Mezzacasa, T., Scandella, L., Güntherodt, H. J., Gerber, C., Gimzewski, J. K., 1998. Appl. Phys. A, 66, S61-S62.

Lange, D., Hagleitner, C., Hierlemann, A., Brand, O., Baltes, H., 2002. Anal. Chem., 74(13), 3084-3095.

Länge, K., Bender, F., Voigt, A., Gao, H., Rapp, M., 2003. Anal. Chem., 75(20), 5561-5566.

Länge, K., Grimm, S., Rapp, M., 2007. Sens. Actuators B, 125, 441-446.

Länge, K., Rapp, B. E., Rapp, M., 2008. Anal. Bioanal. Chem., 391(5), 1509-1519.

Lavrik, N., Sepaniak, M., Datskos, P., 2004. Rev. Sci. Instrum., 75(7), 2229-2253.

Lee, H. S., Kim, K., Kim, C. J., Hahn, S., Jo, M. H., 2009. Biosens. Bioelectron., 24(6), 1801-1805.

Lee, J., Kim, T., Yoon, K., 2004. Appl. Phys. Lett., 84(16), 3187-3189.

Lee, J. H., Hwang, K. S., Park, J., Yoon, K. H., Yoon, D. S., Kim, T. S., 2005. Biosens. Bioelectron., 20(10), 2157-2162.

Lee, Y. G., Chang, K.-S., 2005. Talanta, 65(5), 1335-1342.

Li, G., Morita, S., Ye, S., Tanaka, M., Osawa, M., 2004. Anal. Chem., 76(3), 788-795.

Li, J., Gershow, M., Stein, D., Brandin, E., Golovchenko, J., 2003. Nat. Mater., 2, 611-615.

Li, S., Orona, L., Li, Z., Cheng, Z., 2006. Appl. Phys. Lett., 88(7), 073507.

Li, Z., Chen, Y., Li, X., Kamins, T., Nauka, K., Williams, R., 2004. Nano Lett., 4(2), 245-247.

Li, Z., Rajendran, B., Kamins, T., Li, X., Chen, Y., Williams, R., 2005. App. Phys. A, 80(6), 1257-1263.

Lin, C. H., Hung, C. H., Hsiao, C. Y., Lin, H. C., Ko, F. H., Yang, Y. S., 2009. Biosens. Bioelectron., 24, 3019-3024.

Lin, S. P., Pan, C. Y., Tseng, K. C., Lin, M. C., Chen, C. D., Tsai, C. C., Yu, S. H., Sun, Y. C., Lin, T. W., Chen, Y. T., 2009. Nano Today, 4(3), 235-243.

Lin, T. W., Hsieh, P. J., Lin, C. L., Fang, Y. Y., Yang, J. X., Tsai, C. C., Chiang, P. L., Pan, C. Y., Chen, Y. T., 2010. PNAS, 107(3), 1047-1052.

Liu, A., Wang, K., Weng, S., Lei, Y., Lin, L., Chen, W., Lin, X., Chen, Y., 2012. Trends Anal. Chem., 37, 101-111.

Liu, A., Zhao, Q., Guan, X., 2010. Anal. Chim. Acta, 675(2), 106-115.

Liu, T., Tang, J., Jiang, L., 2004a. Biochem. Biophys. Res. Commun., 313(1), 3-7.

Liu, T., Tang, J., Zhao, H., Deng, Y., Jiang, L., 2002. Langmuir, 18, 5624-5626.

Liu, Y., Zhang, W., Yu, X., Zhang, H., Zhao, R., Shangguan, D., Li, Y., Shen, B., Liu, G., 2004b. Sens. Actuators B, 99, 416-424.

Loebl, H.-P., Wendt, M.; 2005. Patent No. WO 2005036150 A1.

Long, Y., Li, W., Nie, L., Yao, S., 2001. J. Pharm. Biomed. Anal., 24(3), 361-369.

Lu, Y., Chivukula, V., Wang, M., Ji, H.-F., 2006. J. Micromech. Microeng., 16(4), pp. 692-698.

Lucarelli, F., Tombelli, S., Minunni, M., Marrazza, G., Mascini, M., 2008. Anal. Chim. Acta, 609(2), 139-159.

Luo, L., Jie, J., Zhang, W., He, Z.; Wang, J., Yuan, G., Zhang, W., Wu, L., Lee, S. T., 2009. Appl. Phys. Lett., 94(19), 193101.

Luo, X. L., Xu, J. J., Zhao, W., Chen, H. Y., 2004a. Biosens. Bioelectron., 19, 1295-1300.

Luo, X. L., Xu, J. J., Zhao, W., Chen, H. Y., 2004b. Sens. Actuators B, 97, 249-255.

Lux, C., Schyma, C., Burkhard, M., Courst, C., 2014. Forensic Sci. Int., 237, 62-69.

Mabeck, J., Malliaras, G., 2005. Anal. Bioanal. Chem., 384(2), 343-353.

Mader, A., Gruber, K., Castelli, R., Hermann, B. A., Seeberger, P. H., Rädler, J. O., Leisner, M., 2012. Nano Lett., 12(1), 420-423.

Mao, X., Yang, L., Su, X.-L., Li, Y., 2006. Biosens. Bioelectron., 21(7), 1178-1185.

Maqbool, R., Hussain, M. U., 2014. Cell Tissue Res., 358(1), 1-15.

Maraldo, D., Rijal, K., Campbell, G., Mutharasan, R., 2007. Anal. Chem., 79(7), 2762-2770.

Marie, R., Jensenius, H., Thaysen, J., Christensen, C. B., Boisen, A., 2002. Ultramicroscopy, Volume 91, 29-36.

Matatagui, D., Fontecha, J., Fernández, M., Grácia, I., Cané, C., Santos, J., Horrillo, M., 2014. Sensors, 14(7), 12658-12669.

McKendry, R., Zhang, J., Arntz, Y., Strunz, T., Hegner, M., Lang, H. P., Baller, M. K., Certa, U., Meyer, E., Guntherodt, H. J., Gerber, C., 2002. PNAS, 99(15), 9783-9788.

Meller, A., Frank-Kamenetskii, M., Wanunu, M., Kuhn, H., Singer, A., Morrison, W.; 2012. Patent No. US 20120276530 A1.

Meller, A. & Wanunu, M.; 2010. Patent No. WO 2009020682 A3.

Mishra, N., Maki, W., Cameron, E., Nelson, R., Winterrowd, P., Rastogi, S., Filanoski, B., Maki, G., 2008. Lab Chip, 8(6), 868-871.

Mo, Z., Wang, H., Liang, Y., Liu, F., Xue, Y., 2005. The Analyst, 130(12), 1589-1594.

Moll, N., Pascal, D. Dinh, D., Pillot, J.-P., Bennetau, B., Rebiére, D., Moynet, D., Mas, Y., Mossalayi, D., Pistré, J., Déjous, C., 2007. Biosens. Bioelectron., 22, pp. 2145-2150.

Mutharasan, R., Maraldo, D. R.; 2011. Patent No. US 7993854 B2.

Mutharasan, R., Rijal, K., Maraldo, D. R., Campbell, G. A.; 2014. Patent No. US 20140045178 A1.

Noor, M. O., Krull, U. J., 2014. Anal. Chim. Acta, 825, 1-25.

Okahata, Y., Matsunobu, J. Y., Ijiro, K., Mukae, M., Murakami, A., Makino, K., 1992. J. Am. Chem. Soc., 114, 8299-8300.

O'Sullivan, C., Guilbault, G., 1999. Biosens. Bioelectron., 14, 663-670.

O'Shea, S. J., Lu, P., Shen, F., Neuzil, P., Zhang, Q. X., 2005. Nanotechnology, 16(4), 602-608.

O'Uchi, S.; 2006. Patent No. US 20060147983 A1.

Pang, L.-L., Li, J.-S., Jiang, J.-H., Le, Y., Shen, G. L., Yu, R.-Q., 2007. Sens. Actuators B, 127, 311-316.

Paniel, N., Baudart, J., Hayat, A., Barthelmebs, L., 2013. Methods, Volume 64, 229-240.

Park, I.-S. K. D.-K., Adanyi, N., Varadi, M., Kim, N., 2004. Biosens. Bioelectron., 19(7), 667-674.

Passamano, M., Pighini, M., 2006. Sens. Actuators B, 118, 177-181.

Patolsky, F., Lichtenstein, A., Willner, I., 2000a. J. Am. Chem. Soc., 122, 418-419.

Patolsky, F., Ranjit, K., Lichtenstein, A., Willner, I., 2000b. Chem. Commun., 1025-1026.

Patolsky, F., Zheng, G., Hayden, O., Lakadamyali, M., Zhuang, X., Lieber, C. M., 2004. PNAS, 101(39), 14017-14022.

Pavey, K., Olliff, C., Lyle, E.-L., Paul, F., 2001. The Analyst, 126(4), 426-428.

Percival, C., Stanley, S., Braithwaite, A., Newton, M., McHale, G., 2002. The Analyst, 127(8), 1024-1028.

Pethig, R. & Smith, S., Introductory Bioelectronincs 2013. John Wiley & Sons, Ltd., Chichester, UK.

Poghossian, A., Yoshinobu, T., Simonis, A., Ecken, H., Luth, H., Schoning, M. J., 2001. Sens. Actuators B, 78, 237-242.

Pohanka, M., Skládal, P., 2005. Anal. Lett. 38, 411-422.

Pouthas, F., Gentil, C., Côte, D., Bockelmann, U., 2004. Appl. Phys. Lett., 84(9), 1594-1596.

Pritchard, C. C., Cheng, H. H., Tewari, M., 2012. Nat. Rev. Genet., 13(5), 358-369.

Purushothaman, S., Toumazou, C., Ou, C., 2006. Sens. Actuators B, 114, 964-968.

Qavi, A. J., Kindt, J. T., Bailey, R. C., 2010. Anal. Bioanal. Chem., 398(6), 2535-2549.

Rasmussen, P. A., Thaysen, J., Hansen, O., Eriksen, S. C., Boisen, A., 2003. Ultramicroscopy, 97, 371-376.

Rasmusson, A., Gizeli, E., 2001. J. Appl. Phys., 90(12), 5911-5914.

Ren, Y., Deng, H., Shen, W., Gao, Z., 2013. Anal. Chem., 85(9), 4784-4789.

Ricco, A., Crooks, R., Osbourn, G., 1998. Acc. Chem. Res., 31, 289-296.

Rijal, K., Mutharasan, R., 2007. Anal. Chem., 79(19), 7392-7400.

Rocha-Gaso, M.-I., March-Iborra, C., Montoya-Baides, Á., Arnau-Vives, A., 2009. Sensors, 9(12), 5740-5769.

Rothberg, J., Hinz, W., Rearick, T., Schultz, J., Mileski, W., Davey, M., Leamon, J., Johnson, K., Milgrew, M., Edwards, M., Hoon, J., Simons, J., Marran, D., Myers, J., Davidson, J., Branting, A., Nobile, J., Puc, B., Light, D., Clark, T., Huber, M., Branciforte, J. T., Stoner, I. B., Cawley, S. E., Lyons, M., Fu, Y., Homer, Nils, Sedova, M., Miao, X., Reed, B., Sabina, J., Feierstein, E., Schorn, M., Alanjary, M., Dimalanta, E., Dressman, D., Kasinskas, R., Sokolsky, T., Fidanza, J. A., Namsaraev, E., McKernan, K. J., Williams, A., Roth, G. T., Bustillo, J., 2011. Nature, 475(7356), 348-352. Rugar, D., Yannoni, C., Sidles, J., 1992. Nature, 360(3404), 563-566.

Rupp, S., Vonschickfus, M., Hunklinger, S., Eipel, H., Priebe, A., Enders, D., Pucci, A., 2008. Sens. Actuators B, 134, 225-229.

Ryu, S. W., Kim, C. H., Han, J. W., Kim, C. J., Jung, C., Park, H., Choi, Y. K., 2010. Biosens. Bioelectron., 25, 2182-2185.

Sadeghi, H., Algaragholy, L., Pope, T., Bailey, S., Visontai, D., Manrique, D., Ferrer, J., Garcia-Suarez, V., Sangtarash, S., Lambert, C. J., 2014. J. Phys. Chem. B, 118(24), 6908-6914.

Sakong, J., Roh, H., Roh, Y., 2007. Jpn. J. Appl. Phys., 46(7B), 4729-4733.

Saleh, O., Sohn, L., 2003. PNAS, 100(3), 820-824.

Sander, D., Ibach, H., 1991. Phys. Rev. B, 43(5), 4263-4267.

Sassolas, A., Leca-Bouvier, B. D., Blum, L. J., 2008. Chem. Rev., Volume 108, 109-139.

Savran, C. A., Knudsen, S. M., Ellington, A. D., Manalis, S. R., 2004. Anal. Chem., 76(11), 3194-3198.

Sawafta, F., Clancy, B., Carlsen, A.T., Huber, M. and Hall, A.R., Nanoscale, 6(12), 2014, 6991-6996.

Schoning, M., Poghossian, A., 2002. The Analyst, 127(9), 1137-1151.

Sekiguchi, T., Nakamura, M., Kato, M., Nishikawa, K., Hokari, K., Sugiyama, T., Asaka, M., 2000. Sens. Actuators B, 67, 265-269.

Sergeyeva, T. A., Soldatkin, A. P., Rachkov, A. E., Tereschenko, M. I., Piletsky, S. A., El'skaya, A. V., 1999. Anal. Chim. Acta, 390, 73-81.

Sexton, L., Horne, L., Sherrill, S., Bishop, G., Baker, L., Martin, C., 2007. J. Am. Chem. Soc., 129, 13144-13152.

Shekhawat, G., Tark, S. H., Dravid, V. P., 2006. Science, 311, 1592-1595.

Singer, A., Wanunu, M., Morrison, W., Kuhn, H., Frank-Kamenetskii, M., Meller, M., 2010. Nano Lett., 10, 738-742.

Sípová, H., Zhang, S., Dudley, A. M., Galas, D., Wang, K., Homola, J., 2010. Anal. Chem., 82(24), 10110-10115.

Si, S.-H., Li, X., Fung, Y.-S., Zhu, D.-R., 2001. Microchem. J., 68, 21-27.

Siwy, Z., Trofin, L., Kohli, P., Baker, L., Trautmann, C., Martin, C., 2005. J. Am. Chem. Soc., 127, 5000-5001.

Skinner, G., Hout, M., Broekmans, O., Dekker, C., Dekker, N., 2009. Nano Lett., 9(8), 2953-2960.

Smeets, R., Keyser, U., Krapf, D., Wu, M. Y., Dekker, N., Dekker, C., 2006. Nano Lett., 6(1), 89-95.

Sohn, B. K., Kim, C. S., 1996. Sens. Actuators B, 34, 435-440.

Song, K. S., Zhang, G. J., Nakamura, Y., Furukawa, K., Hiraki, T., Yang, J. H., Funatsu, T., Ohdomari, I., Kawarada, H., 2006. Phys. Rev. E, 74, 041919.

Sorgenfrei, S., Chiu, C., Gonzalez, R., Yu, Y. J., Kim, P., Nuckolls, C., Shepard, K., 2011. Nat. Nanotechnol., 6, 126-132.

Souteyrand, E., Cloarec, J. P., Martin, J. R., Wilson, C., Lawrence, I., Mikkelsen, S., Lawrence, M. F., 1997. J. Phys. Chem. B, 101, 2980-2985.

Spearing, S. M., 2000. Acta Mater., Volume 48, 179-196.

Stachowiak, J., Yue, M., Castelino, K., Chakraborty, A., Majumdar, A., 2006. Langmuir, 22, 263-268.

Star, A., Tu, E., Niemann, J., Gabriel, J., Joiner, C., Valcke, C., 2006. PNAS, 103(4), 921926.

Starodub, N., Dzantiev, B., Starodub, V., Zherdev, A., 2000. Anal. Chim. Acta, 424, 37-43.

Steinhoff, G., Hermann, M., Schaff, W., Eastman, L., Stutzmann, M., Eickhoff, M., 2003. Appl. Phys. Lett., 83(1), 177-179.

Stern, E., Klemic, J. F., Routenberg, D. A., Wyrembak, P. N., Turner-Evans, D. B., Hamilton, A. D., LaVan, D. A., Fahmy, T. M., Reed, M. A.,2007. Nature, 445(7127), 519-522.

Stevenson, K., Mehta, A., Sachenko, P., Hansen, K., Thundat, T., 2002. Langmuir, 18(23), 8732-8736.

Stine, R., Robinson, J., Sheehan, P., Tamanaha, C., 2010. Adv. Mater., 22, 52975300.

Storm, A., Chen, J., Zandbergen, H., Dekker, C., 2005. Phys. Rev. E, 71(5), 051903.

Su, M., Li, S., Dravid, V., 2003. Appl. Phys. Lett., 82(20), 3562-3564.

Su, X., Robelek, R., Wu, Y., Wang, G., Knoll, W., 2004. Anal. Chem., 76(2), 489-494.

Su, X.-L., Li, Y., 2004. Biosens. Bioelectron., 19(6), 563-574.

Su, X.-L., Li, Y., 2005. Biosens. Bioelectron., 21(6), 840-848.

Taillades, G., Valls, O., Bratov, A., Dominguez, C., Pradel, A., Ribes, M., 1999. Sens. Actuators B, 59, 123-127.

Tamarin, O., Comeau, S., Déjous, C., Moynet, D., Rebiére, D., Bezian, J., Pistré, J., 2003. Biosens. Bioelectron., 18, 755-763.

Tang, T., Liu, X., Li, C., Lei, B., Zhang, D., Rouhanizadeh, M., Hsiai, T., Zhou, C., 2005. Appl. Phys. Lett., 86, 103903.

Teles, F., Fonseca, L., 2008. Talanta , 77, 606-623.

Thompson, M., Arthur, C., Dhaliwal, G., 1986. Anal. Chem. 58, 1206-1209.

Tian, F., Hansen, K., Ferrell, T., Thundat, T., Hansen, D., 2005. Anal. Chem., 77(6), 1601-1606.

Tian, R., Regonda, S., Gao, J., Liu, Y., Hu, W., 2011. Lab Chip, 11(11), 1952-1961.

Tigli, O., Bivona, L., Berg, P., Zaghloul, M., 2010. IEEE Trans. Biomed. Circuits Syst., 4(1), 62-73.

Tigli, O., Bivona, L., Chaterjee, C., Zaghloul, M. E., Berg, P., 2008. IEEE Sensors 2008 Conference, pp. 1492-1455.

Tombelli, S., Mascini, M., 2000. Anal. Lett., 33(11), 2129-2151.

Uno, T., Tabata, H., Kawai, T., 2007. Anal. Chem., 79, 52-59.

Uram, J. D., Ke, K., Hunt, A. J., Mayer, M., 2006. Small, 2(8-9), 967-972.

Uslu, F., Ingebrandt, S., Mayer, D., Böcker-Meffert, S., Odenthal, M., Offenhäusser, A., 2004. Biosens. Bioelectron., 19(12), 1723-1731.

Uttenthaler, E., Kösslinger, C., Drost, S., 1998. Biosens. Bioelectron., 13(12), 1279-1286.

Uttenthaler, E., Schräml, M., Mandel, J., Drost, S., 2001. Biosens. Bioelectron., 16(9-12), 735-743.

Vančura, C., Lichtenberg, J., Hierlemann, A., Josse, F., 2005. Appl. Phys. Lett., 87(16), 162510.

Vaughan, R., O'Sullivan, C., Guilbault, G., 2001. Enzyme Microb. Technol., 29, 635-638.

Voiculescu, I., Nordin, A. N., 2012. Biosens. Bioelectron., 33(1), 1-9.

Wan, K., Chovelon, J. M., Jaffrezic-Renault, N., Soldatkin, A. P., 1999. Sens. Actuators B, 58, 399-408.

Wang, D., Zhao, Q., de Zoysa, R. S. S., Guan, X., 2009. Sens. Actuators B, 139, 440-446.

Wang, H., Lei, C., Li, J., Wu, Z., Shen, G., Yu, R., 2004. Biosens. Bioelectron., 19(7), 701-709.

Wang, J., Jiang, M., 1998. J. Am. Chem. Soc., 120, 8281-8282.

Wang, L., Han, Y., Zhou, S., Wang, G., Guan, X., 2014. ACS Appl. Mater. Interfaces, 6(10), 7334-7339.

Wang, W. U., Chen, C., Lin, K. H., Fang, Y., Lieber, C. M., 2005. PNAS, 102(9), 3208-3212.

Wang, Y., Zheng, D., Tan, Q., Wang, M. X., Gu, L. Q., 2011. Nat. Nanotechnol., 6, 668-674.

Wanunu, M., 2012. Phys. Life Rev., 9, pp. 125-158.

Wanunu, M., Dadosh, T., Ray, V., Jin, J., McReynolds, L., Drndić, M., 2010. Nat. Nanotechnol., 5(11), 807-814.

Watari, M., Galbraith, J., Lang, H. P., Sousa, M., Hegner, M., Gerber, C., Horton, M., McKendry, R., 2007. J. Am. Chem. Soc., 129(3), 601-609.

Weizmann, Y., Patolsky, F., Willner, I., 2001. The Analyst, 126(9), 1502-1504.

Willner, I., Patolsky, F., Weizmann, Y., Willner, B., 2002. Talanta, 56(5), 847-856.

Wipf, M., Stoop, R., Tarasov, A., Bedner, K., Fu, W., Wright, I., Martin, C., Constable, E., Calame, M., Schönenberger, C., 2013. ACS Nano, 7(7), 5978-5983.

Wong, W., Shepherd, L., Georgiou, P., Toumazou, C., 2009. IEEE Sensors 2009 Conference, pp. 1451-1454.

Wong, Y. Y., Ng, S. P., Ng, M. H., Si, S. H., Yao, S. Z., Fung, Y. S., 2002. Biosens. Bioelectron., 17(8), 676-684.

Wu, G., Datar, R., Hansen, K., Thundat, T., Cote, R., Majumdar, A., 2001. Nat. Biotechnol., 19(9), 856-860.

Wu, H. C., Bayley, H., 2008. J. Am. Chem. Soc., 130(21), 6813-6819.

Wu, T.-Z., Su, C.-C., Chen, L.-K., Yang, H.-H., Tai, D.-F., Peng, K.-C., 2005. Biosens. Bioelectron., 21(5), 689-695.

Xu, Q., Chang, K., Lu, W., Chen, W., Ding, Y., Jia, S., Zhang, K., Li, F., Shi, J., Cao, L., Deng, S., Chen, M., 2012. Biosens. Bioelectron., 33(1), 274-278.

Yao, C., Zhu, T., Tang, J., Wu, R., Chen, Q., Chen, M., Zhang, B., Huang, J., Fu, W., 2008. Biosens. Bioelectron., 23, 879-885.

Yaralioglu, G., Atalar, A., Manalis, S., Quate, C., 1998. J. Appl. Phys., 83(12), 7405-7415.

Yi, J., Shih, W., Shih, W. H., 2002. J. Appl. Phys., 91(3), 1680-1686.

Zhang, G., Chua, H. J., Chee, R. E., Subramanian, N. B., Barnard, R., Raghavan, U.; 2012. Patent No. US 20120129709 A1.

Zhang, G.-J., Agarwal, A., Buddharaju, K., Singh, N., Gao, Z., 2007. Appl. Phys. Lett., 90(23), 233903.

Zhang, G.-J., Chua, J. H., Chee, R.-E., Agarwal, A., Wong, S., Buddharaju, K., Balasubramanian, N., 2008. Biosens. Bioelectron., 23, pp. 1701-1707.

Zhang, G.-J., Chua, J. H., Chee, R. E., Agarwal, A., Wong, S. M., 2009. Biosens. Bioelectron., 24(8), 2504-2508.

Zhang, G.-J., Luo, Z., Huang, M., Tay, G., Lim, E. J., 2010a., Biosens. Bioelectron., 25, 2447-2453.

Zhang, G.-J., Zhang, L., Huang, M. J., Luo, Z. H., Tay, G. K., Lim, E.-J., Kang, T. G., Chen, Y., 2010b. Biosens. Bioelectron., 146, 138-144.

Zhang, G.-J., Luo, Z., Huang, M., Ang, J., Kang, T., Ji, H., 2011. Biosens. Bioelectron., 28(1), 459-463.

Zhang, G.-J., Ning, Y., 2012. Anal. Chim. Acta, 749, 1-15.

Zhang, J., Lang, H., Battiston, F., Backmann, N., Huber, F., Gerber, C., 2013. Sensors, 13(4), 5273-5285.

Zhang, J., Su, X. D., O'Shea, S. J., 2002. Biophys. Chem., 99(1), 31-41.

Zhang, S., Peng, T., Yang, C., 2002. J. Electroanal. Chem., 522, 152-157.

Zhang, X., Wang, Y., Fricke, B., Gu, L. Q., 2014. ACS Nano, 8(4), 3444-3450.

Zhang, Y., Telyatnikov, V., Sathe, M., Zeng, X., Wang, P. G., 2003. J. Am. Chem. Soc., 125(31), 9292-9293.

Zhao, Q., Jayawardhana, D. A., Guan, X.; 2010. Patent No. US 20100099198 A1.

Zheng, G., Gao, X. P., Lieber, C. M., 2010. Nano Lett., 10(8), 3179-3183.

Zheng, G., Patolsky, F., Cui, Y., Wang, W., Lieber, C., 2005. Nat. Biotechnol., 23(10), 1294-1301.

Zhou, X., Liu, L., Hu, M., Wang, L., Hu, J., 2002. J. Pharm. Biomed. Anal., 27(1-2), 341-345.

Zhou, X. C., Huang, L. Q., Li, S. F. Y., 2001. Biosens. Bioelectron., 16, 85-95.

Ziaie, B., Baldi, A., Lei, M., Gu, Y., Siegel, R. A., 2004. Adv. Drug Deliv. Rev., 56(2), 145-172.

Ziegler, C., 2004. Anal. Bioanal. Chem., 379, 946-959.